Description	Appendix 9
Dimension requirements for floorball stick	

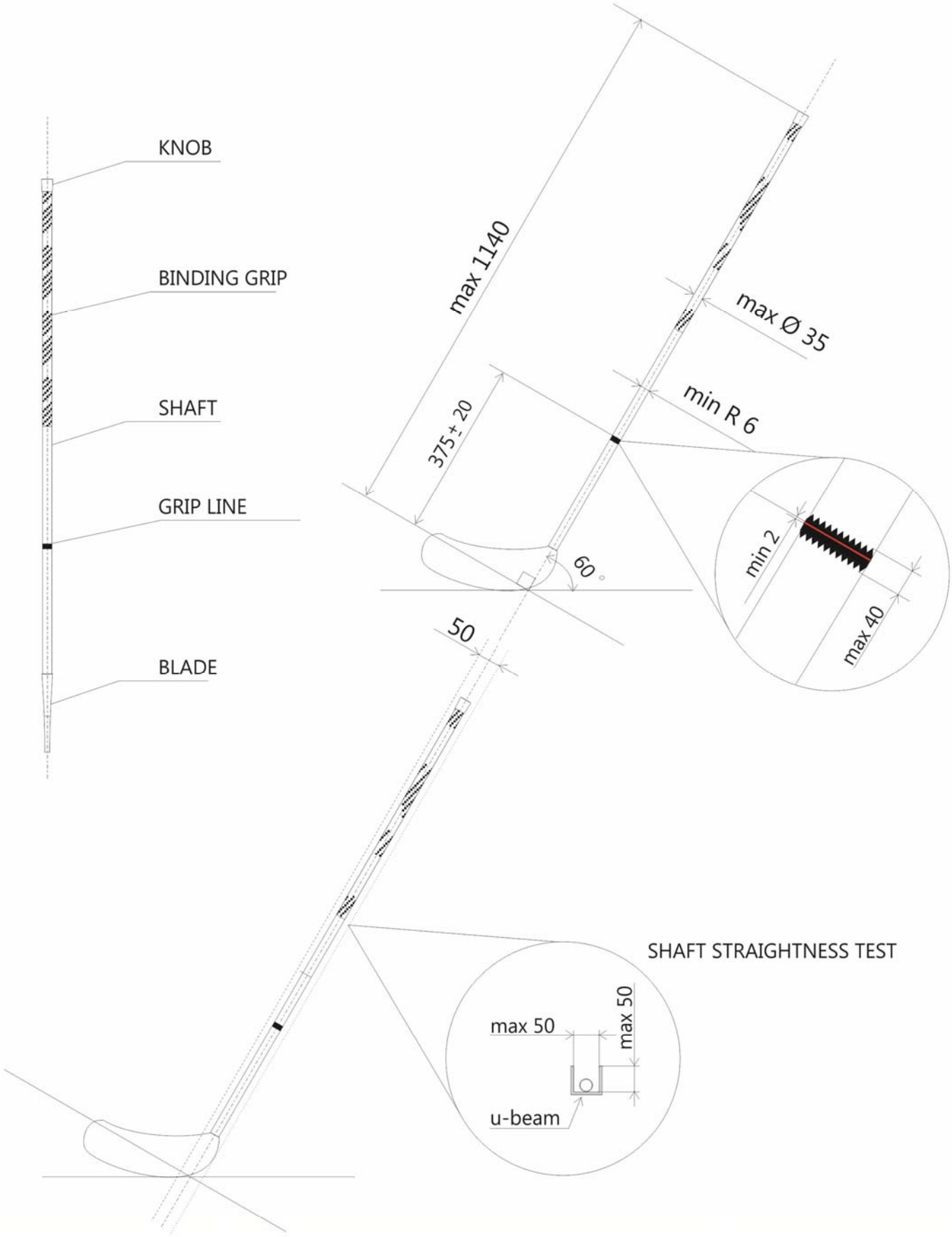

Drawn by	Inspected by	Approved by	Remarks	Replaces	Version
L-Å H				090702, ver 7	**8**

RISE Research Institute of Sweden Chemistry and Materials Technology Section for Polymer Technology Box 857 501 15 BORÅS, Sweden	Title **Floorball stick**	Drawn **110919**	
		Drawing no. **SPCR 011-09e**	

Description	Appendix 10
Dimension requirements for floorball stick blade	

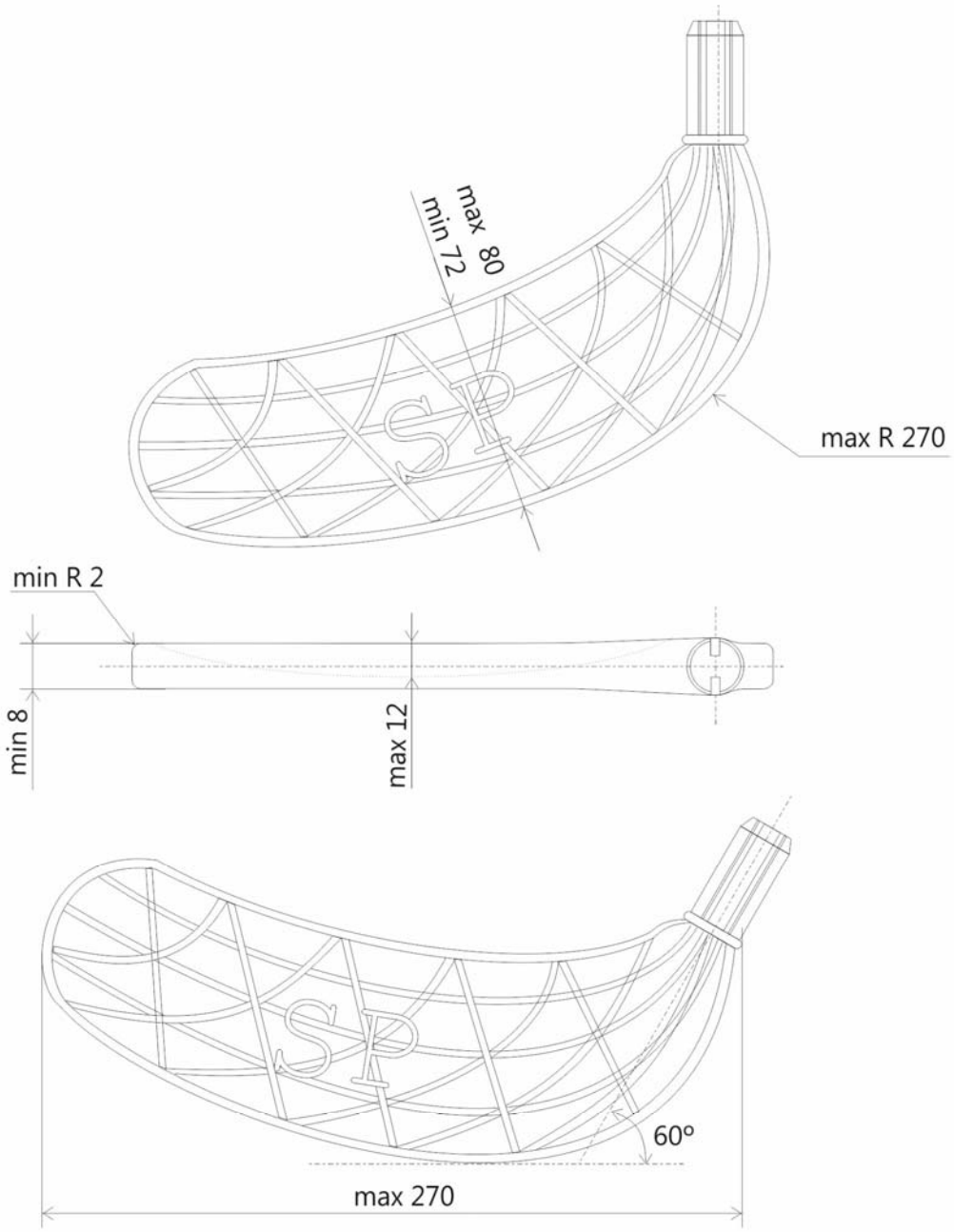

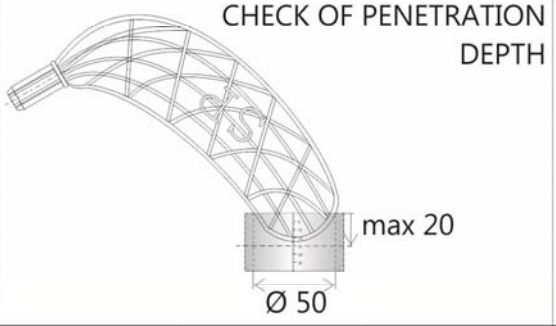

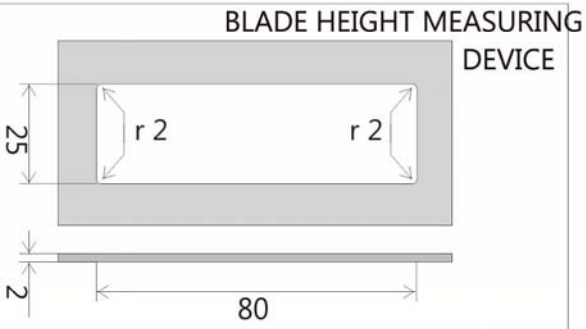

Drawn by	Inspected by	Approved by	Remarks	Replaces	Version
L-Å H				050103, ver 5	**6**

RISE Research Institute of Sweden
Chemistry and Materials Technology
Section for Polymer Technology
Box 857
501 15 BORÅS, Sweden

Title: **Stick blade**

Drawn: **090903**

Drawing no.: **SPCR 011-10e**

Description	Appendix 11
Dimension requirements for floorball ball	

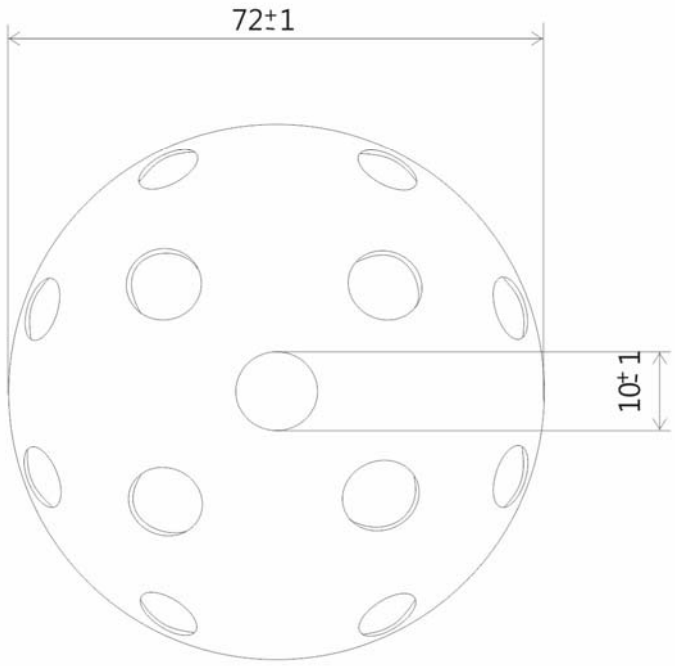

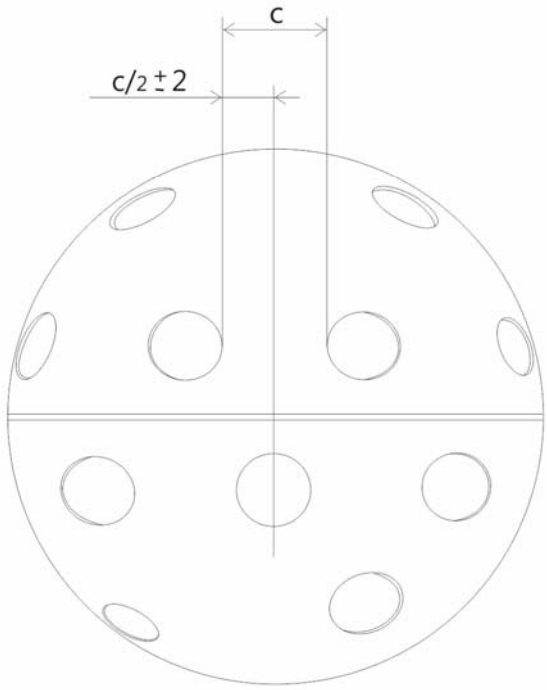

Drawn by	Inspected by	Approved by	Remarks	Replaces	Version
L-Å H				930924, ver 2	**3**

RISE Research Institute of Sweden
Chemistry and Materials Technology
Section for Polymer Technology
Box 857
501 15 BORÅS, Sweden

Title

Floorball ball

Drawn **951115**

Drawing no. **SPCR 011-11e**

Description	Dimension requirements for floorball goal	Appendix 12

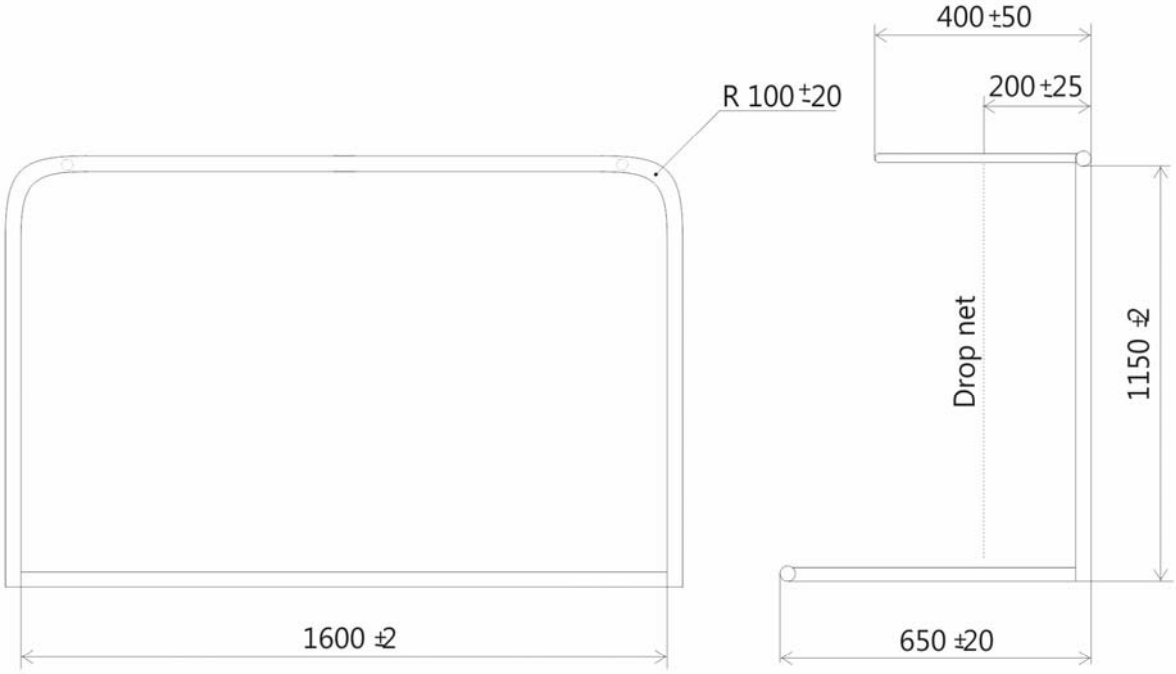

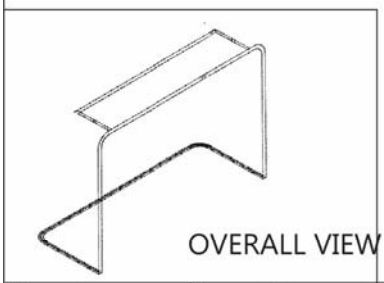

Drawn by	Inspected by	Approved by	Remarks	Replaces	Version
L-Å H				060315, ver 6	7

RISE Research Institute of Sweden
Chemistry and Materials Technology
Section for Polymer Technology
Box 857
501 15 BORÅS, Sweden

Title

Floorball goal

Drawn **090903**

Drawing no. **SPCR 011-12e**

Description	Dimension requirements for floorball rink	Appendix 13

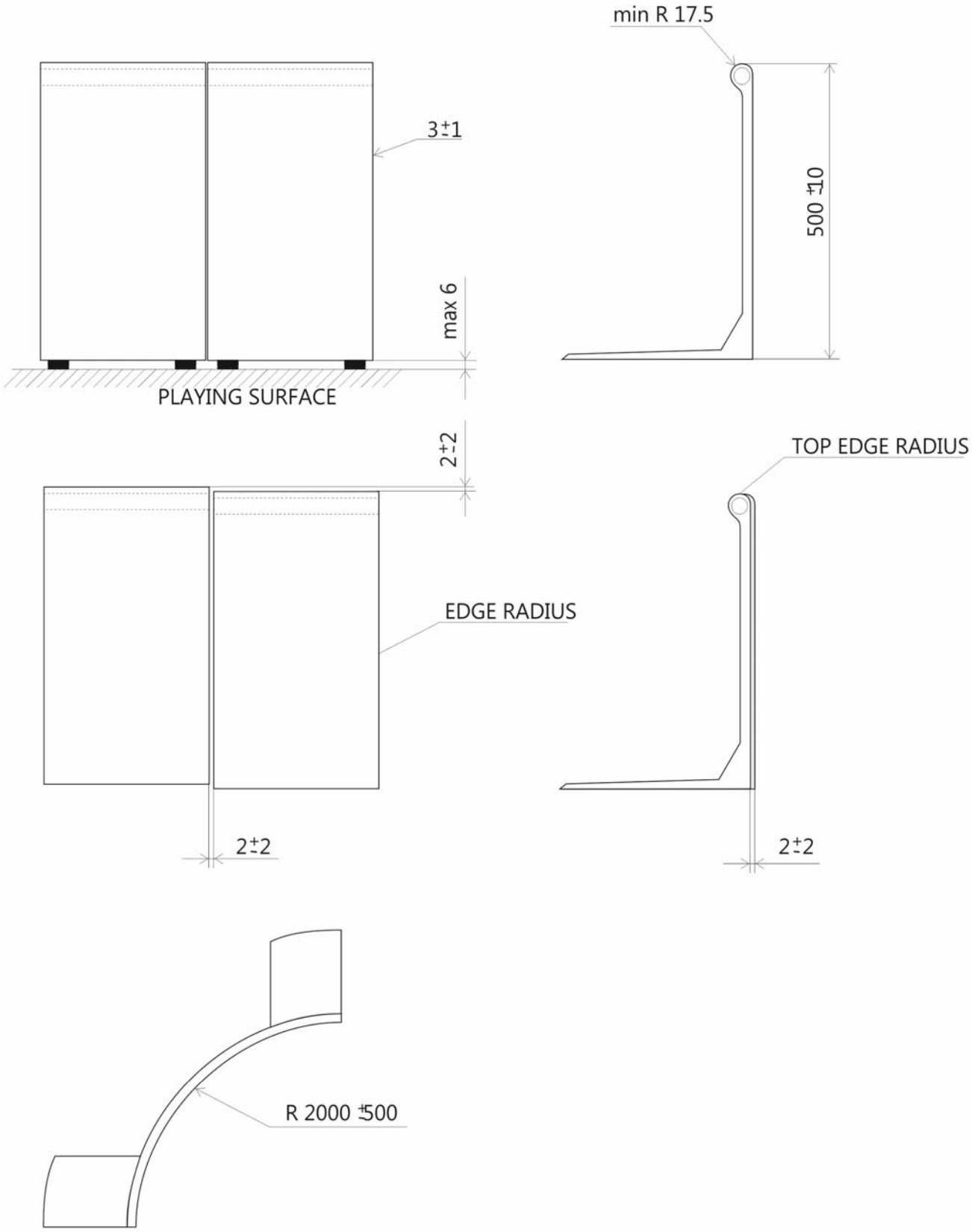

Drawn by	Inspected by	Approved by	Remarks	Replaces	Version
L-Å H				951115, ver 3	4

RISE Research Institute of Sweden
Chemistry and Materials Technology
Section for Polymer Technology
Box 857
501 15 BORÅS, Sweden

Title: **Floorball rink**

Drawn: **040524**

Drawing no.: **SPCR 011-13e**

Description	Equipment for measuring blade penetration depth and concavity depth	Appendix 14

MEASURING DEVICE FOR BLADE PENETRATION DEPTH

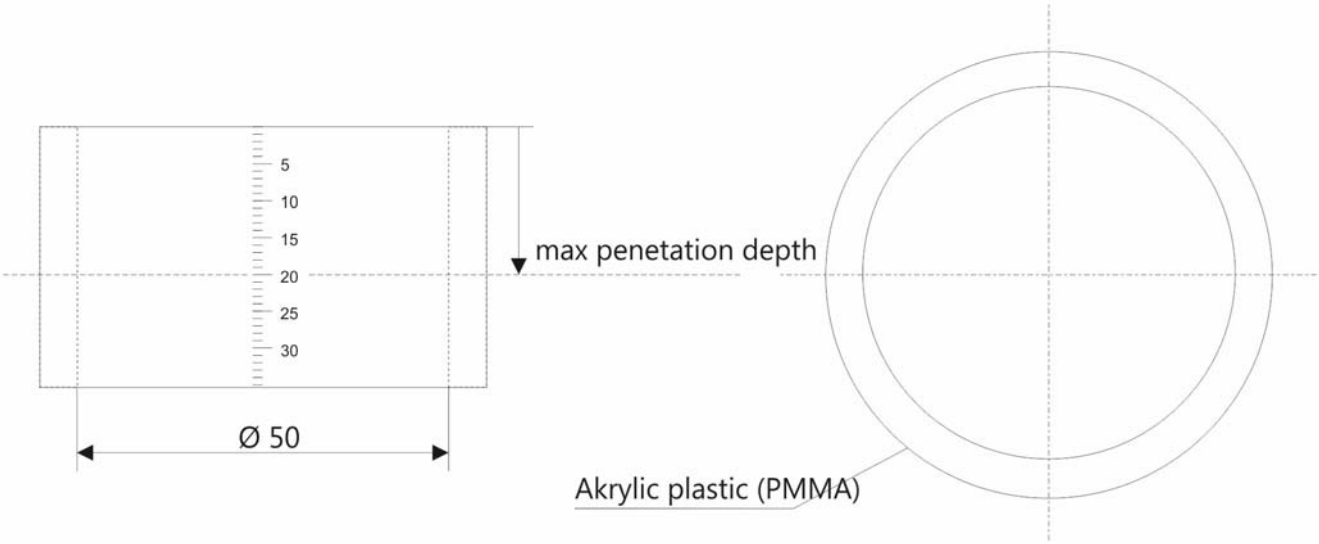

MEASURING DEVICE FOR BLADE CONCAVITY DEPTH

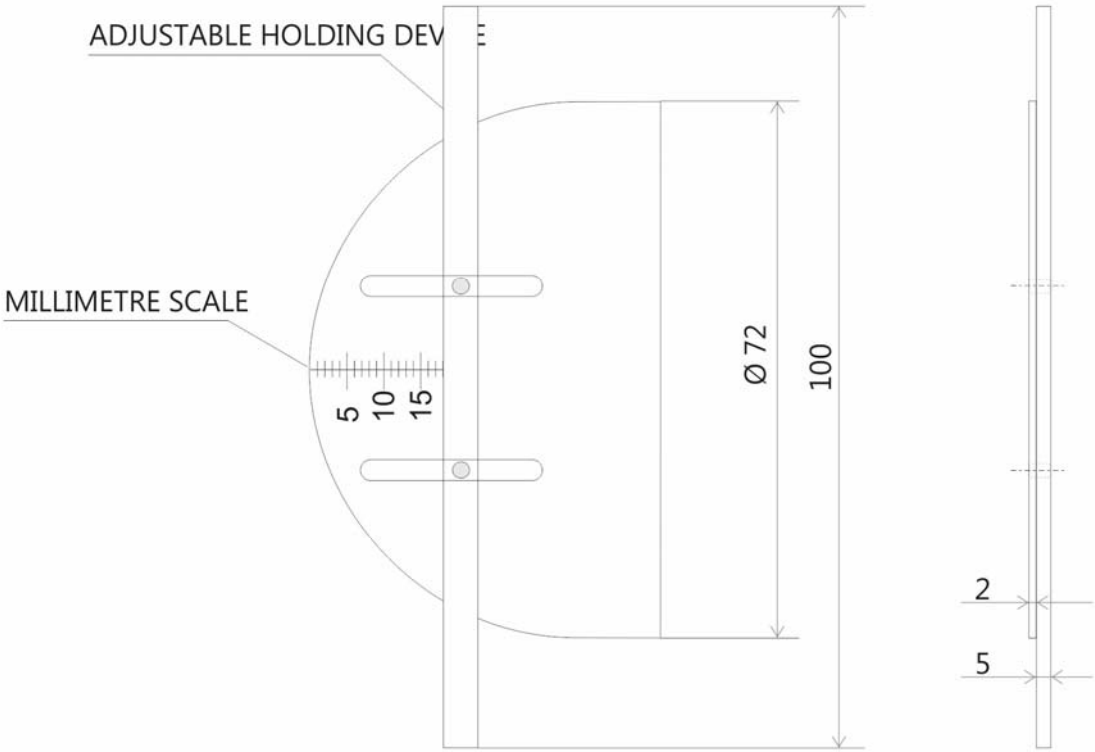

Drawn by	Inspected by	Approved by	Remarks	Replaces	Version
L-Å H				930924, ver 2	3

RISE Research Institute of Sweden
Chemistry and Materials Technology
Section for Polymer Technology
Box 857
501 15 BORÅS, Sweden

Title

Equip. for penetration and concavity depth

Drawn **951115**

Drawing no. **SPM 1506-14e**

Description	Appendix 15
Floorball stick dimensions	

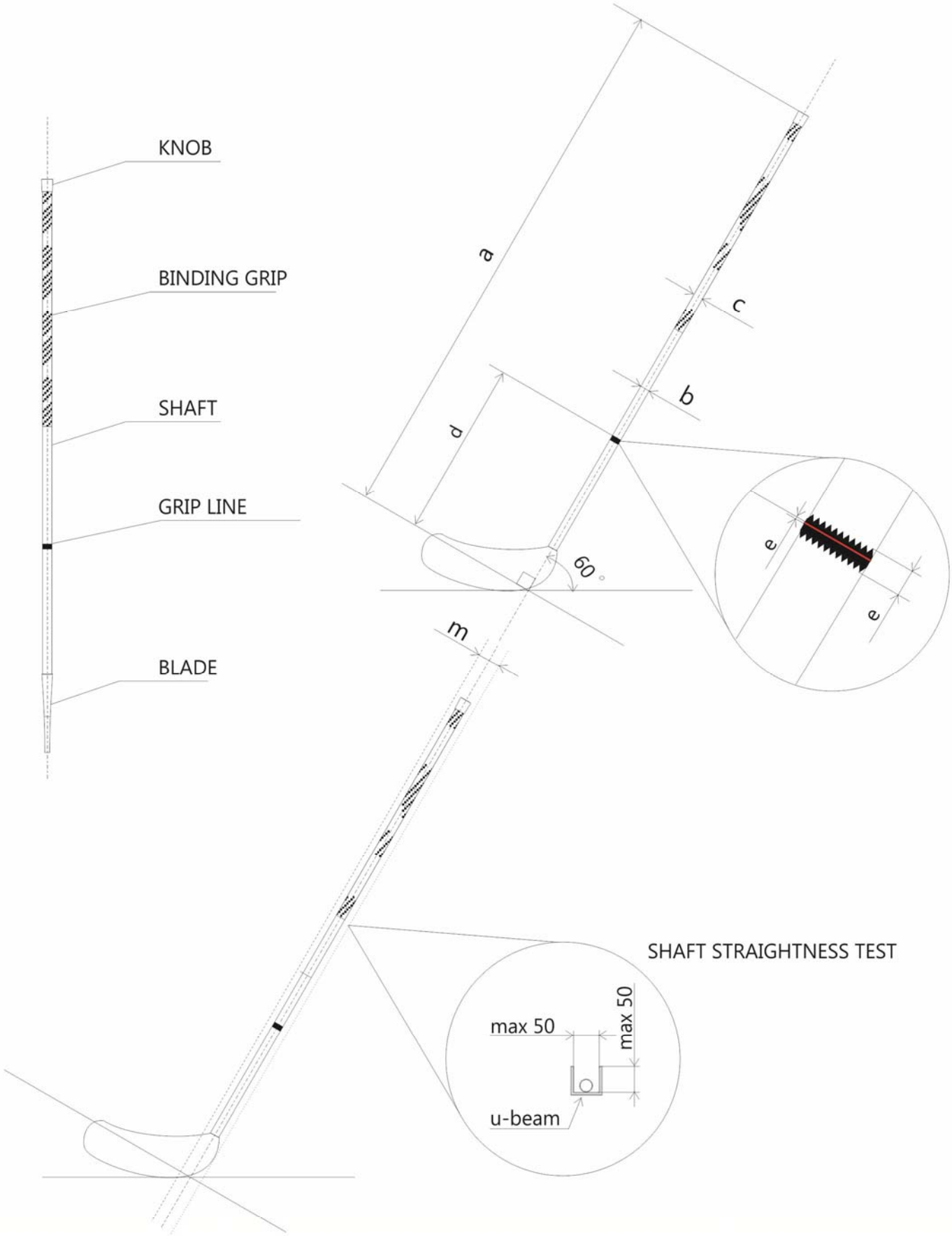

Drawn by	Inspected by	Approved by	Remarks	Replaces	Version
L-Å H				090702, ver 6	**7**

RISE Research Institute of Sweden
Chemistry and Materials Technology
Section for Polymer Technology
Box 857
501 15 BORÅS, Sweden

Title: **Floorball stick**

Drawn: **110919**

Drawing no.: **SPM 1506-15e**

Description **Floorball stick blade dimensions**	**Appendix 16**

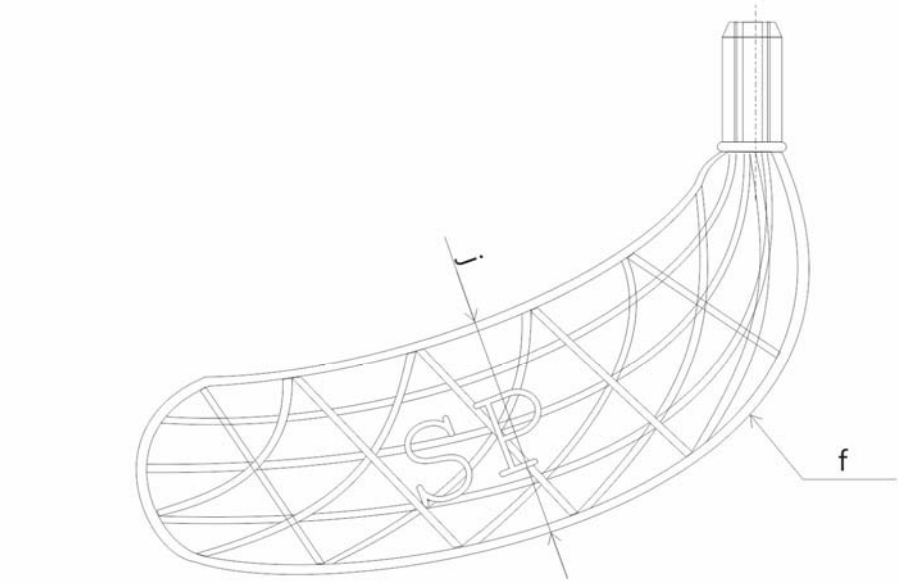

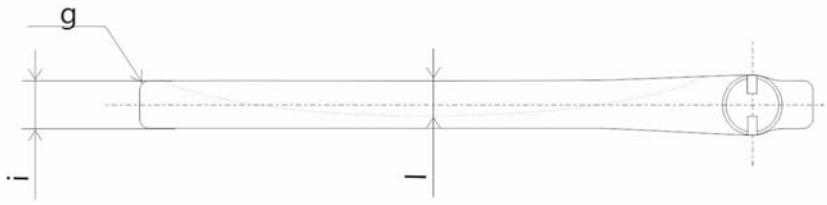

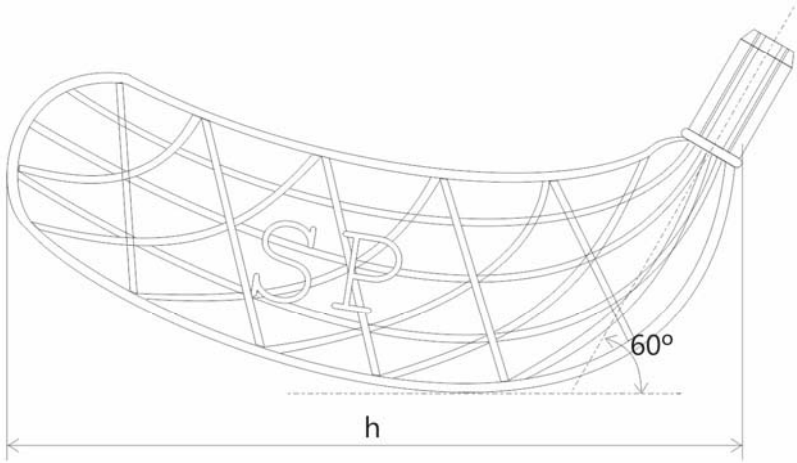

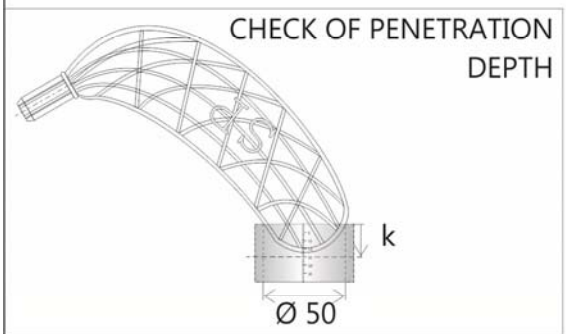

Drawn by	Inspected by	Approved by	Remarks	Replaces	Version
L-Å H				050103, ver 4	**5**

RISE Research Institute of Sweden
Chemistry and Materials Technology
Section for Polymer Technology
Box 857
501 15 BORÅS, Sweden

Title
Floorball stick blade

Drawn
090702

Drawing no.
SPM 1506-16e

Description	Equipment for deflection test	Appendix 17

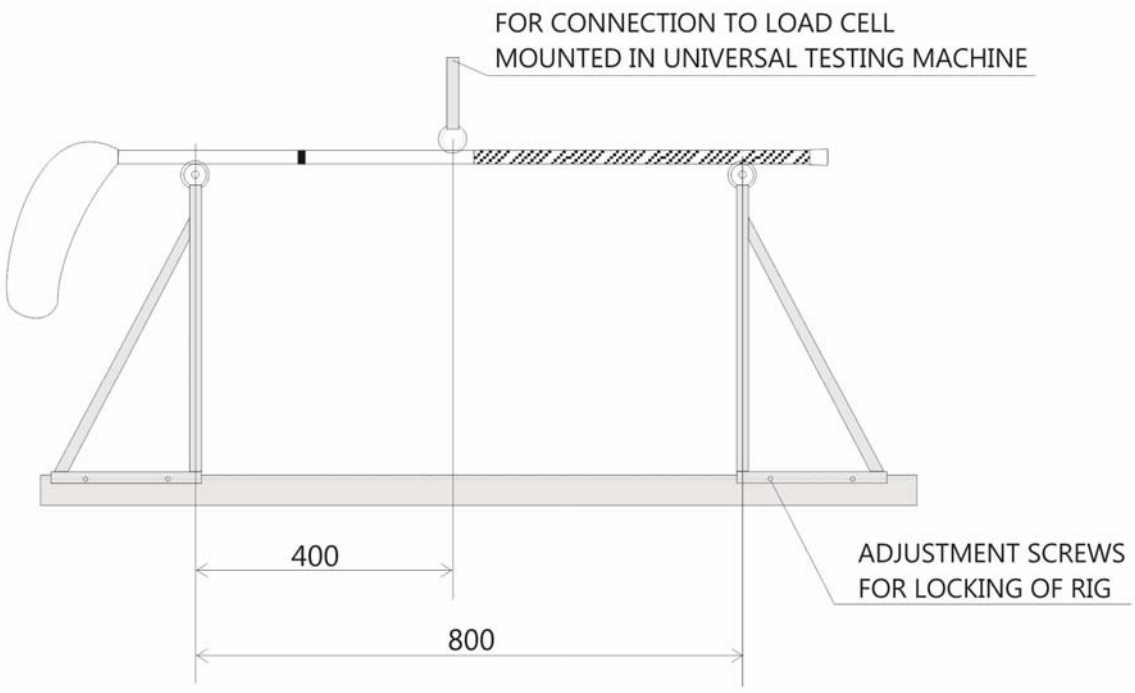

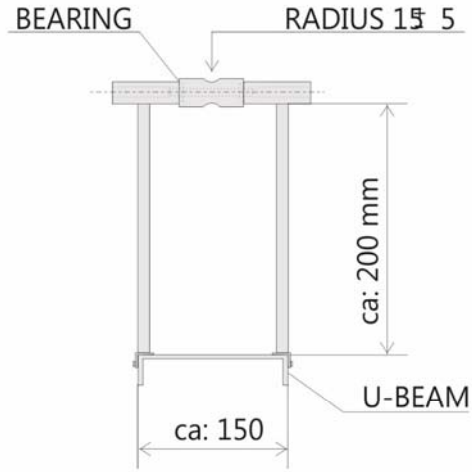

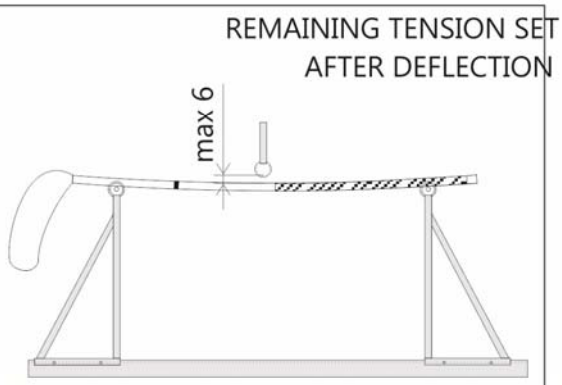

Drawn by	Inspected by	Approved by	Remarks	Replaces	Version
L-Å H				930924, ver 2	3

RISE Research Institute of Sweden
Chemistry and Materials Technology
Section for Polymer Technology
Box 857
501 15 BORÅS, Sweden

Title
Deflection

Drawn
951115

Drawing no.
SPM 1506-17e

Description	Appendix 18
Equipment for impact test	

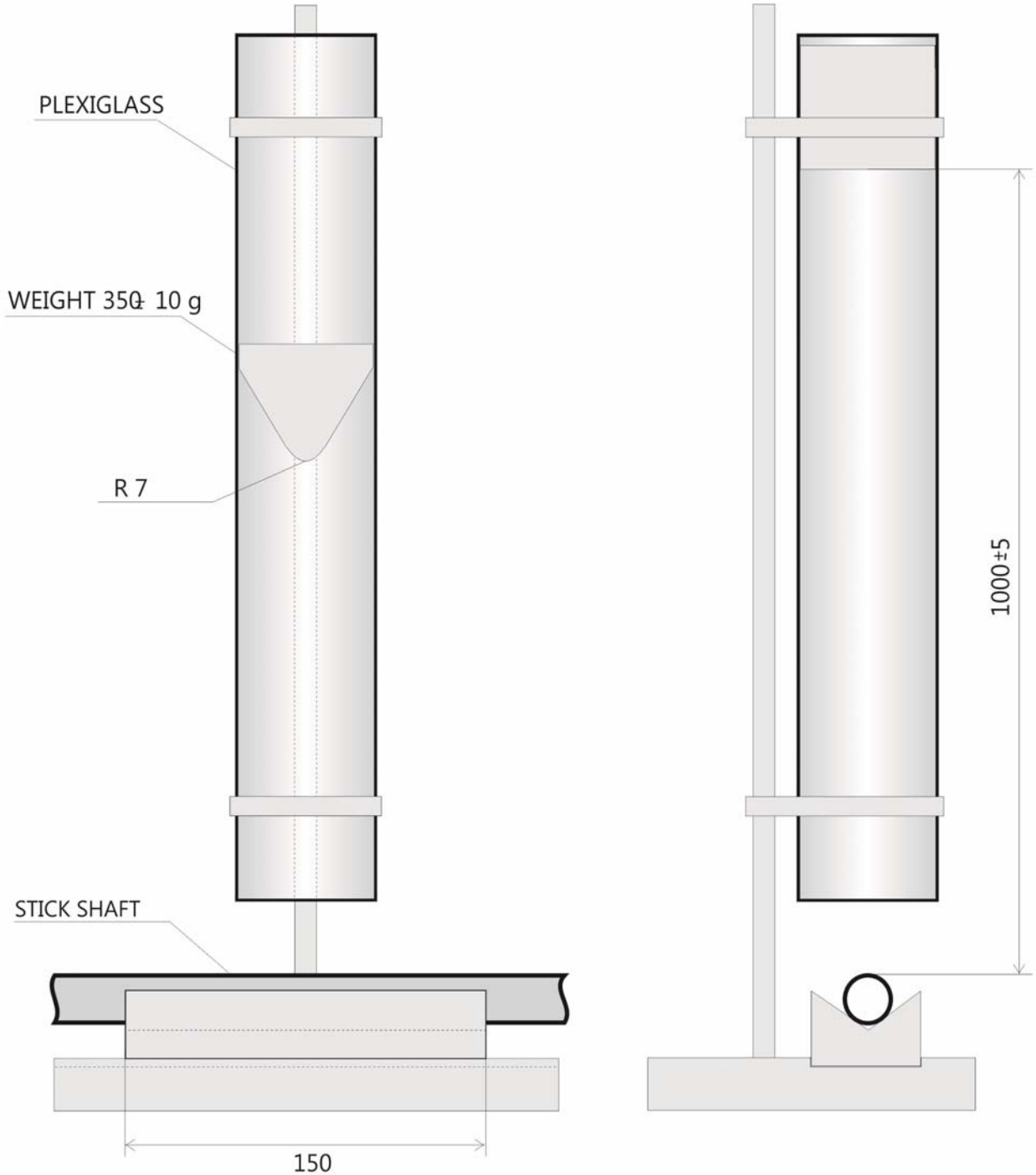

Drawn by	Inspected by	Approved by	Remarks	Replaces	Version
L-Å H				930924, ver 2	**3**

RISE Research Institute of Sweden
Chemistry and Materials Technology
Section for Polymer Technology
Box 857
501 15 BORÅS, Sweden

Title
Impact test

Drawn
951115

Drawing no.
SPM 1506-18e

Description	Appendix 19
Equipment for discoloration test	

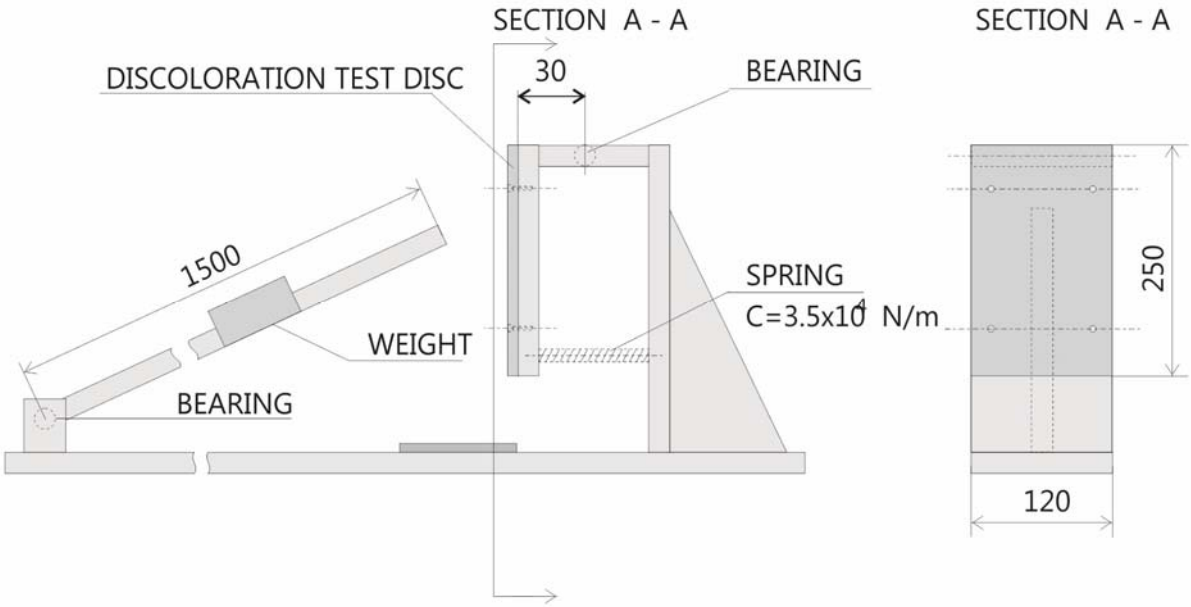

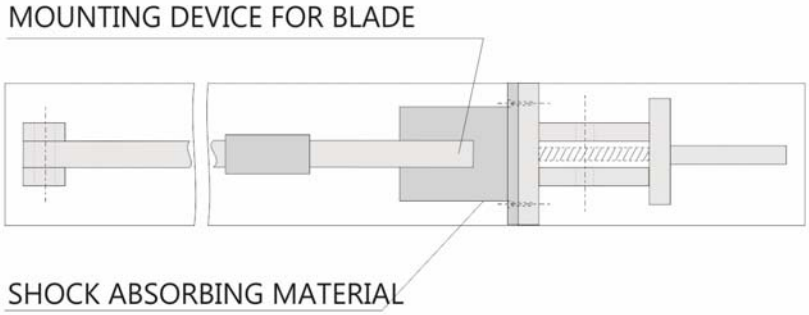

Drawn by	Inspected by	Approved by	Remarks	Replaces	Version
L-Å H				930924, ver 2	3

RISE Research Institute of Sweden Chemistry and Materials Technology Section for Polymer Technology Box 857 501 15 BORÅS, Sweden	Title **Discoloration**	Drawn **951115**	
		Drawing no. **SPM 1506-19e**	

Description	Appendix 20
Floorball ball dimensions	

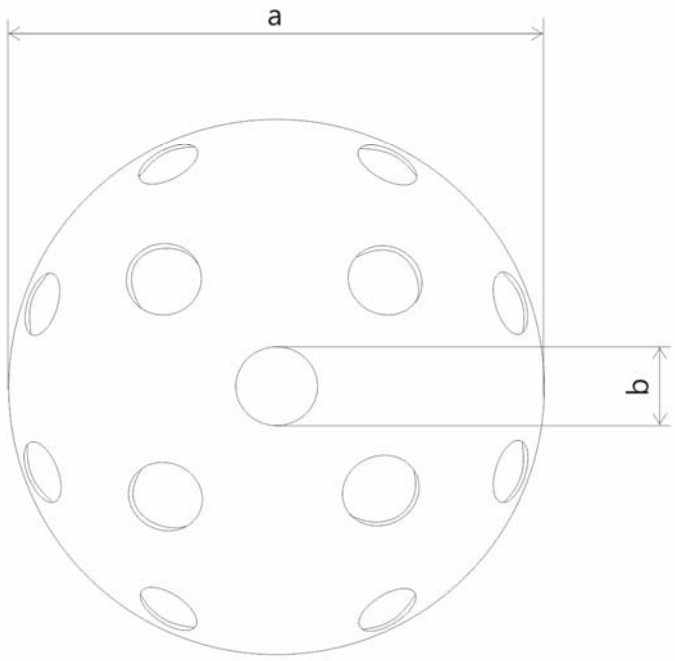

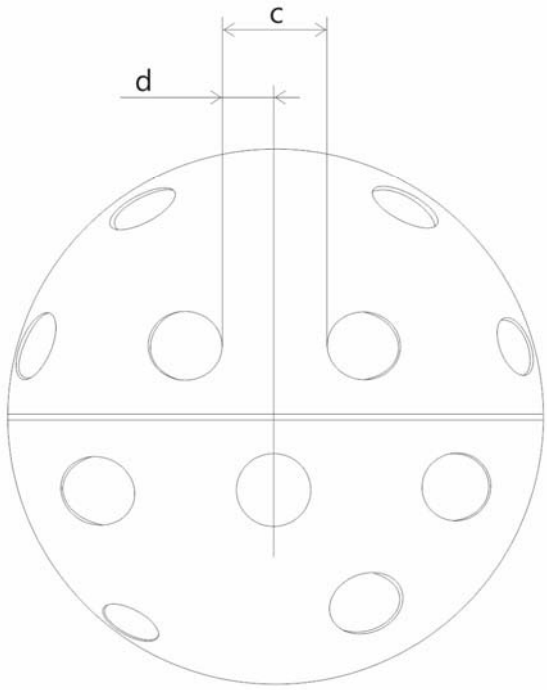

Drawn by	Inspected by	Approved by	Remarks	Replaces	Version
L-Å H				930924, ver 2	**3**

RISE Research Institute of Sweden
Chemistry and Materials Technology
Section for Polymer Technology
Box 857
501 15 BORÅS, Sweden

Title

Floorball ball

Drawn **951115**

Drawing no. **SPM 1506-20e**

Description	Equipment for ball rebound test	Appendix 21

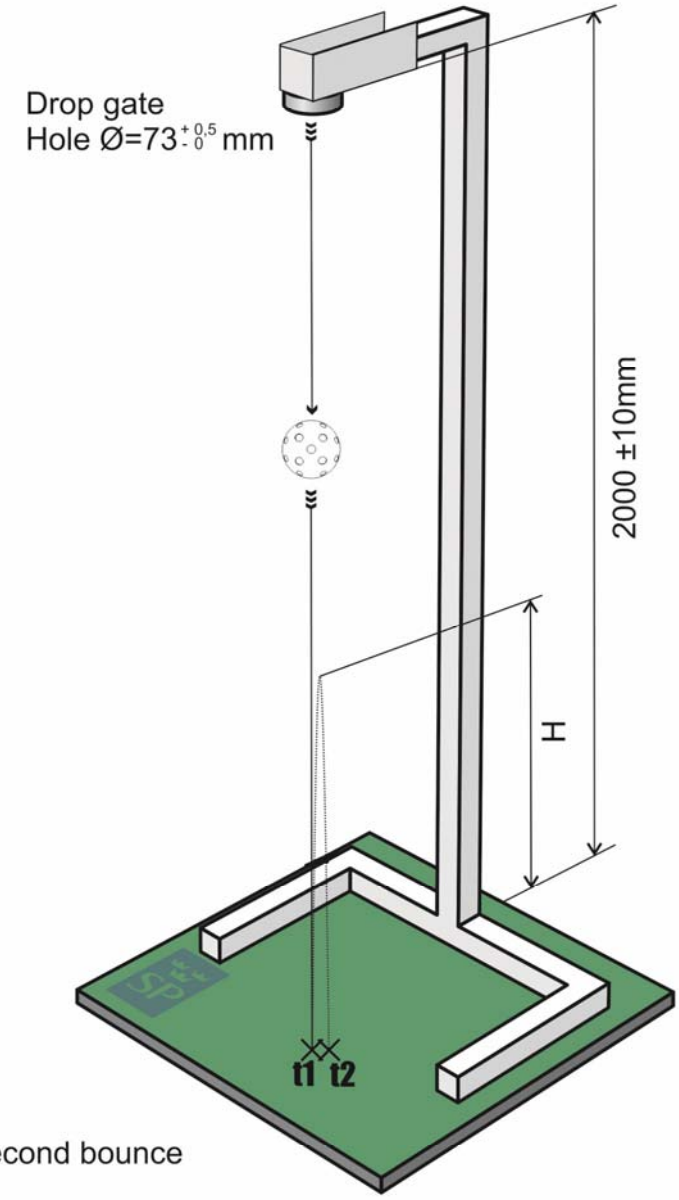

$H=1,23(T-K_1)^2$
1,23=g/8
T=t2-t1, time between first and second bounce
K_1= correction factor

Drawn by	Inspected by	Approved by	Remarks	Replaces	Version
L-Å H				951115, ver 3	4

RISE Research Institute of Sweden
Chemistry and Materials Technology
Section for Polymer Technology
Box 857
501 15 BORÅS, Sweden

Title
Ball rebound

Drawn
140424

Drawing no.
SPM 1506-21e

Description	Appendix 22
Floorball goal dimensions	

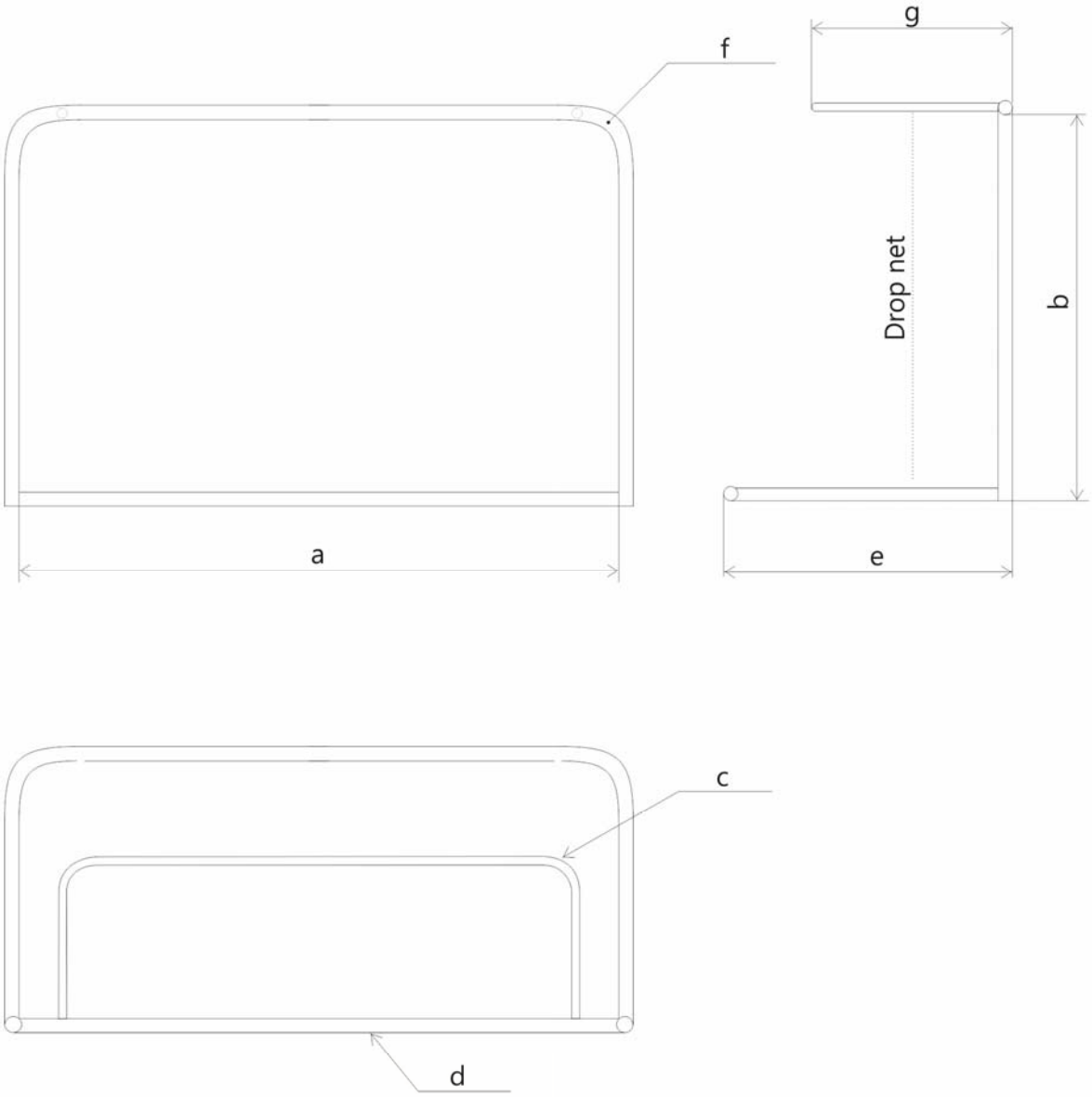

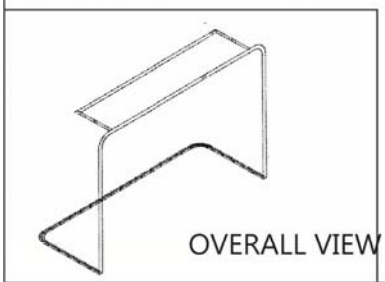

Drawn by	Inspected by	Approved by	Remarks	Replaces	Version
L-Å H				040623, ver 5	**6**

RISE Research Institute of Sweden
Chemistry and Materials Technology
Section for Polymer Technology
Box 857
501 15 BORÅS, Sweden

Title
Floorball goal

Drawn
060315

Drawing no.
SPM 1506-22e

Description	Appendix 23
Floorball rink dimensions	

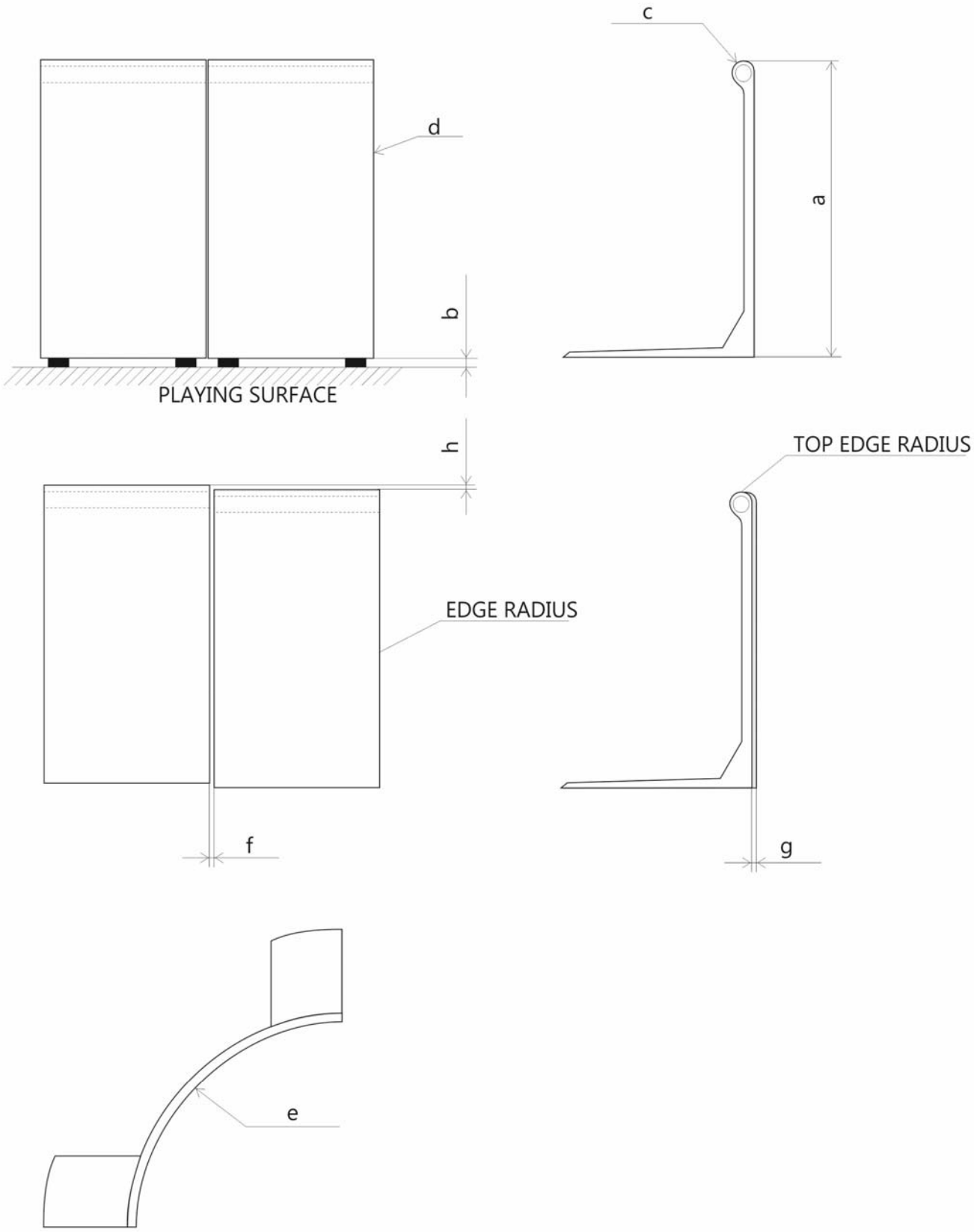

Drawn by	Inspected by	Approved by	Remarks	Replaces	Version
L-Å H				951115, ver 3	**4**

RISE Research Institute of Sweden
Chemistry and Materials Technology
Section for Polymer Technology
Box 857
501 15 BORÅS, Sweden

Title
Floorball rink

Drawn
040524

Drawing no.
SPM 1506-23e

Description	Equipment for impact test on face mask	Appendix 24

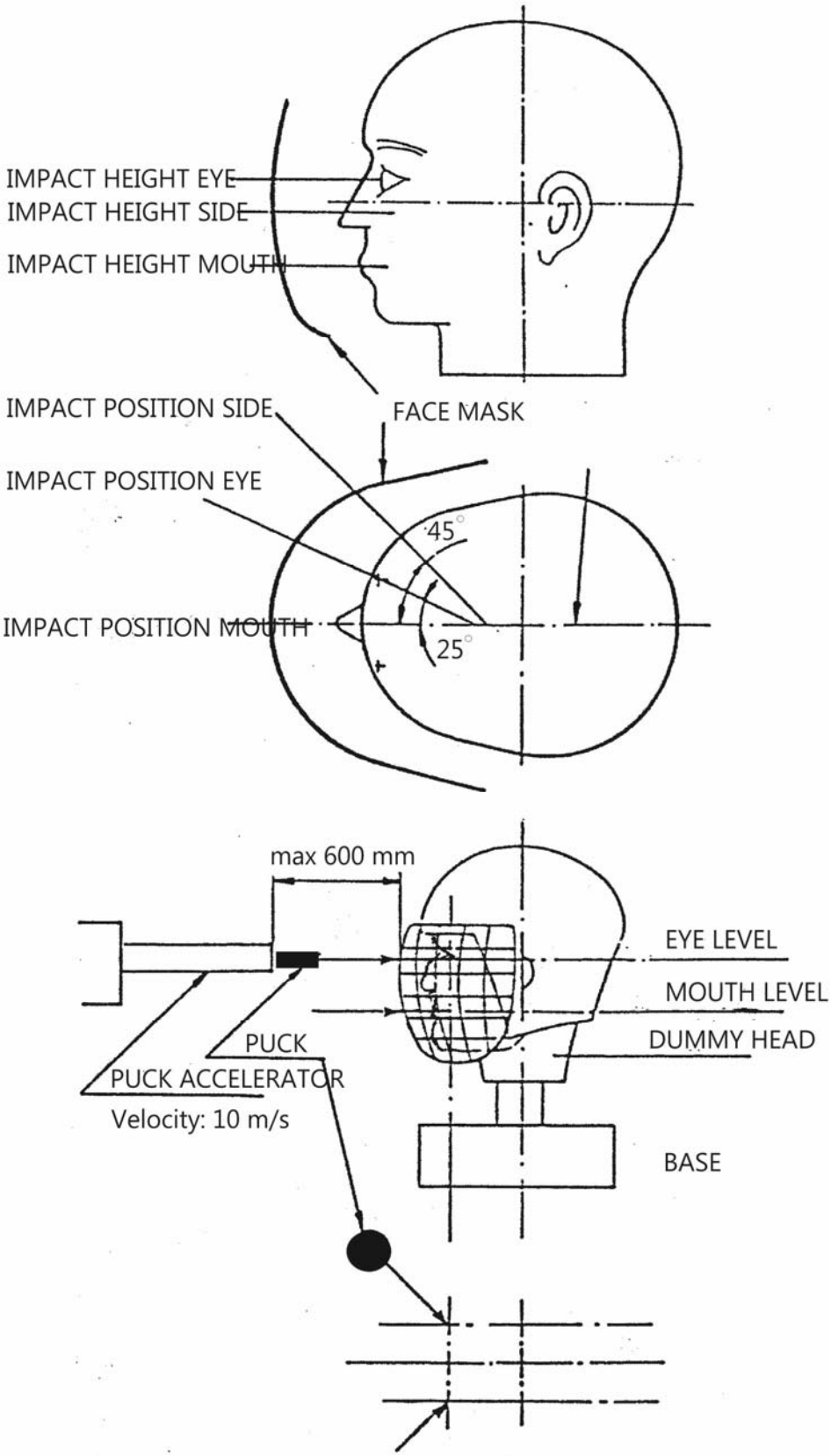

Drawn by	Inspected by	Approved by	Remarks	Replaces	Version
L-Å H				930924, ver 2	3

RI SE	**RISE Research Institute of Sweden** Chemistry and Materials Technology Section for Polymer Technology Box 857 501 15 BORÅS, Sweden	Title **Face mask**	Drawn **951115** Drawing no. **SPM 1506-24e**

Description	Equipment for net size test on face mask	Appendix 25

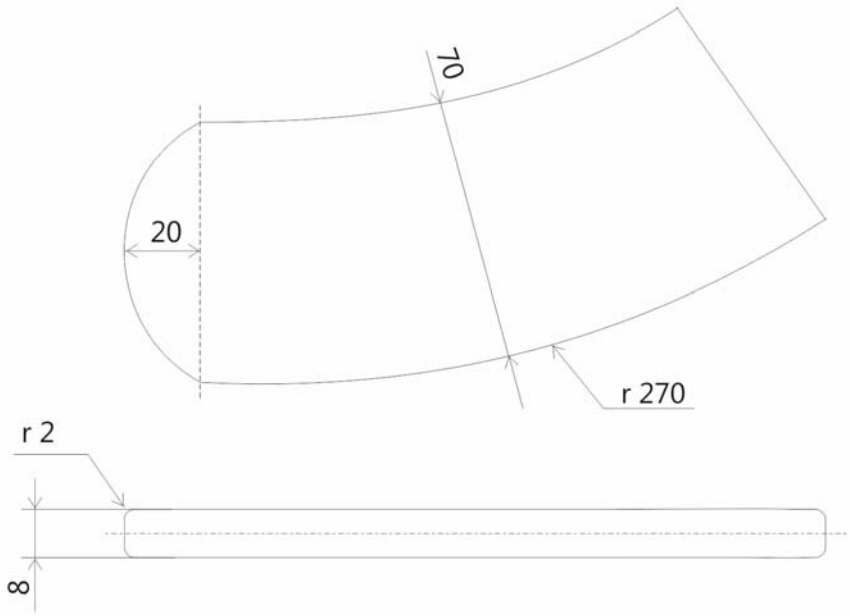

Drawn by	Inspected by	Approved by	Remarks	Replaces	Version
L-Å H				080512	4

RISE Research Institute of Sweden
Chemistry and Materials Technology
Section for Polymer Technology
Box 857
501 15 BORÅS, Sweden

Title

Stick Blade Measuring Device

Drawn **090702**

Drawing no. **SPM 1506-25e**

Description	Appendix 26
Limeted area of other plastic materials / laminate	

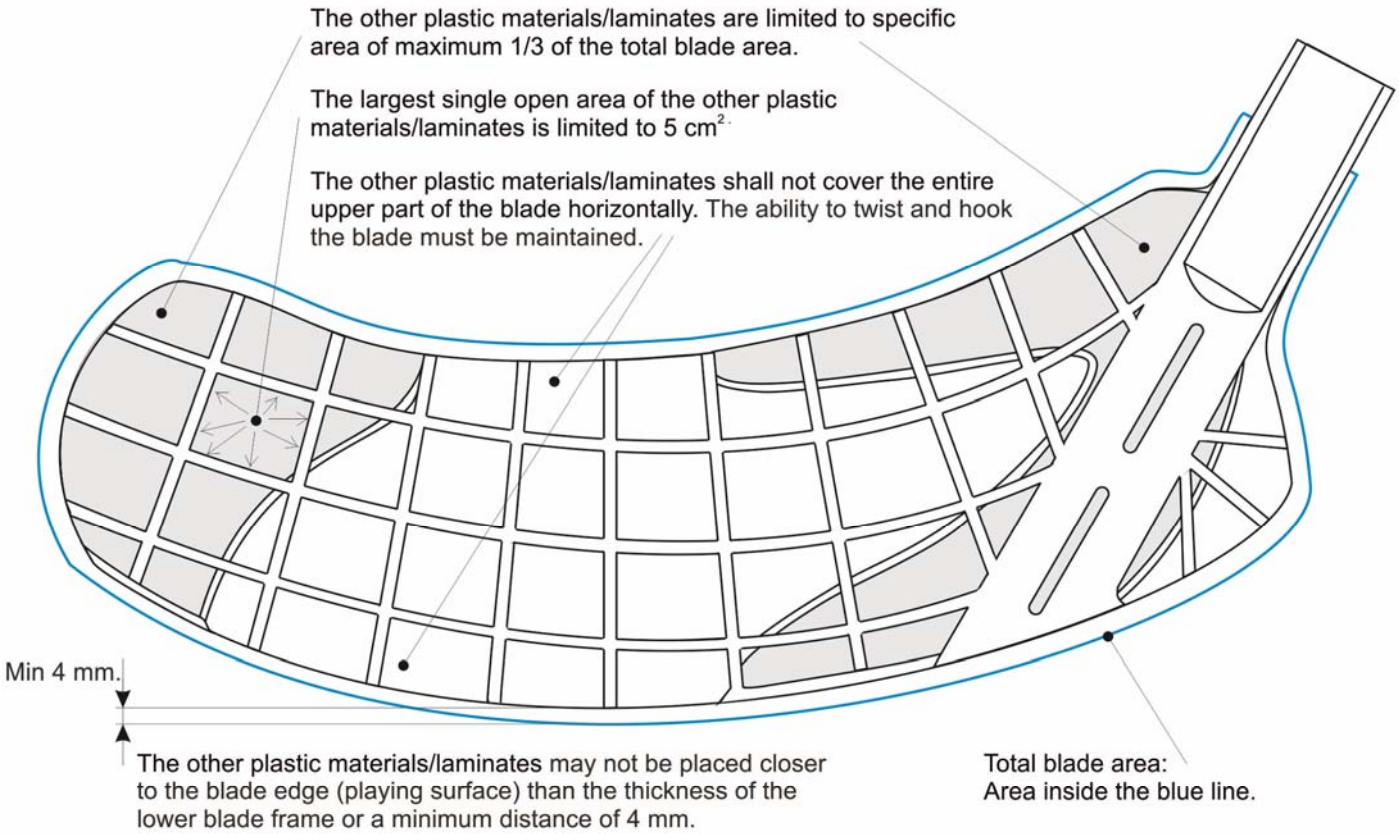

The drawing is just showing an example of possible placement of the other plastic material / laminates.

Drawn by	Inspected by	Approved by	Remarks	Replaces	Version
L-Å H					1

RISE Research Institute of Sweden
Chemistry and Materials Technology
Section for Polymer Technology
Box 857
501 15 BORÅS, Sweden

Title

Stick Blade Limeted Area

Drawn **130523**

Drawing no. **SPCR 011-26e**