MATERIAL REGULATIONS

International Floorball Federation

Material Regulations
and
Certification Rules for IFF-marking
of
Floorball Equipment
SPCR 011

Edition 2022

Interpretation of the Material Regulations.

If the need to interpret Material Regulations between two editions occurs, can this be done 2 times / year (in May and December).

Valid from January 1, 2023

© International Floorball Federation 1999-2022
All rights reserved.

Prepared by
RISE Research Institutes of Sweden AB
Certification
SPCR 011

Preface

Certification rules for IFF-marking Floorball Equipment

Certification involves confirmation by an independent third party that a product fulfils requirements set out in standards or some other form of specification. Certification by RISE is performed by RISE Certification, a department that is separate from the testing and inspection departments. Certification of products by RISE is performed in accordance with EN ISO/IEC 17065.

RISE, as an appointed certification body by IFF, can certify products for the IFF-mark. This certification means that the product fulfils technical requirements and that there is a continuous surveillance. The certification rules herein specify the conditions for certification, technical requirements for Floorball equipment. The technical requirements are verified by testing in accordance with SP-method 1506. The continuous surveillance consists of testing of samples purchased on the open market or factory samples.

The certification rules are based on applicable standards or specifications but may be subject to review henceforth e.g., for adjustment to European or international standards. A review can also be legitimate if new regulations are introduced or because of new information gained from applying certification rules.

The certification rules and reviews of the rules will always be subject to approval of IFF.

This version replaces the previous version dated July 2022.

Borås, December 2022

RISE Research Institutes of Sweden AB

Martin Tillander
Director Product Certification

IFF International Floorball Federation

John Liljelund
IFF Secretary General

List of Contents

Preface **3**

List of Contents **4**

0 **The certification processes** **9**
0.1 Scope 9
0.2 Application 9
0.3 Review of application 9
0.4 Sampling and test samples 9
0.5 Evaluation 9
0.6 Review and decision 10
0.7 Certificate 10

1 **Requirements, general** **11**
1.1 Requirements and rules 11
1.1.1 Application 11
1.1.2 Supplier´s In-House Inspection 11
1.1.3 Agreement 11
1.1.4 Period of Validity for Certificate 11
1.1.5 Modification of Certified Product 12
1.1.6 Rules for transfer of a brand/s to other company and responsibility before new certificates can be issued 12
1.1.7 Rules for current license holders before new certificates can be issued 12
1.1.8 Rules for current license holders with payment problems and debts to IFF/RISE over 5.000 CHF 12
1.1.9 Rules for exemptions 12
1.2 IFF-Marking, general 13
1.2.1 Non-acceptable brand names / model names 14
1.2.2 Accounting reports 14
1.2.3 New IFF logo 14
1.3 Stick, Shaft and Blade 14
1.3.1 Marking of stick 15
1.3.2 General Rules for the Floorball Stick 15
1.3.3 Name of certificate holder 15
1.3.4 Uniformed stick measurement 15
1.3.5 Embossed mark for blade 16
1.3.6 Shaft certificate 16
1.4 Ball, Marking and Rules 16
1.4.1 Embossed mark for ball 16
1.4.2 Ball colour 16
1.5 Goal, Marking and Rules 17
1.5.1 Name of certificate holder 17
1.6 Rinks, Marking and Rules 17
1.6.1 Name of certificate holder 17
1.7 Face Protector grille, Embossed marking 17
1.8 Floorball Accessories 17

2 **Technical Requirements - Type Testing and Criteria** **18**
2.1 Stick incl. the Blade 18
2.1.1 Stick Design 18
2.1.2 Stick Weight 18
2.1.3 Stick Dimensions 19
2.1.4 Shaft Rigidity 19
2.1.5 Shaft and Blade Impact Strength 19

2.1.6	Blade Radii	19
2.1.7	Blade Discoloration onto Playing Surface	19
2.1.8	Blade Torsion Strength	20
2.2	Ball	20
2.2.1	Ball Weight	20
2.2.2	Ball Dimensions	20
2.2.3	Ball Surface Fineness	20
2.2.4	Number of Holes	20
2.2.5	Breaking Stress	20
2.2.6	Rebound	20
2.2.7	Ball Marking	20
2.3	Goal	20
2.3.1	General Design	21
2.3.2	Goal Dimensions	21
2.3.3	Goal Weight	21
2.3.4	Pad Discoloration onto Playing Surface	21
2.3.5	Drop Net Strength	21
2.3.6	Net Mesh Size	21
2.3.7	The mesh should be min 40 x 40 mm and max 50 mm x 50 mm, apply to all goal sizes. Drop Net Length and Mounting / Positioning	21
2.4	Rink	21
2.4.1	Rink Dimensions	21
2.4.2	Rink Radii	22
2.4.3	Rink Section Fitment	22
2.4.4	Rink Surface Fineness	22
2.4.5	Impact Test	22
2.4.6	Ball Rebound against Rink	22
2.4.7	Rink weight per running meter	22
2.5	Face Protector Grille	22
2.5.1	Face Protector Grille Marking	22
2.5.2	Other Requisite Markings (only valid within the European Union)	22
3	**Supplier's In-House Inspection**	**22**
3.1	In-house journal	23
3.1.1	In-house journal - Ball	23
3.1.2	In-house journal - Stick	23
3.1.3	In-house journal - Goal	24
3.1.4	In-house journal - Rink	24
4	**Continuous surveillance**	**25**
4.1	Application	25
4.2	Testing and Inspection	25
4.2.1	Sampling	25
4.2.2	Test methods and requirements	25
4.2.3	Inspection of marked equipment	26
4.2.4	Examination of after request submitted inspection records	26
4.3	Responses if products fail testing	26
4.3.1	Renewed testing	26
4.3.2	Results of renewed testing	26
4.4	Responses if products fail inspection	26
4.4.1	Failed inspection	26
4.4.2	Results of examination of the written presentation	26
4.5	Responses if submitted inspection records are not approved	27
4.5.1	Assessment of corrective measures applied	27
4.6	Sanction System	27
4.6.1	Level 0	28

4.6.2	Level 1	28
4.6.3	Level 2	29
4.6.4	Level 3	300
4.6.5	Sanctions for not sending accounting reports.	31
4.6.6	Level 1	31
4.6.7	Level 2	31
4.6.8	Level 3	31
4.6.9	Level 4	31
4.6.10	Supervisory inspection - Testing	31
4.6.11	Supervisory inspection - Results of further testing	31
4.6.12	Supervisory inspection - Failure of inspection	32
4.6.13	Supervisory inspection - Inspection records	32
4.7	Miscellaneous	32
5	**Miscellaneous Conditions for Certification**	**33**
5.1	General	33
5.2	Certificate Holder's Responsibility	33
5.3	Certificate Holder's Right to Use IFF's Certification Mark	33
5.4	RISE Responsibility	33
5.5	Confidentiality	33
5.6	Certificate	34
5.7	Recall of Certificate	34
5.8	Certificate Holder's Undertaking on Recall of Certificate	35
5.9	Return of Certificate	35
5.10	Revised Certification Rules	35
5.11	Fees	35
5.12	Other Inspection	35
5.13	Appeals	35

Appendix A1 Methods for Verification of Equipment Criteria for Floorball Equipment.
Appendix A2 Provisions for acceptance of other testing, certification, and inspection bodies.
Appendix A3 Application form for testing.
Appendix A4 Application form for certification.
Appendix A5 Order form for certification marks.
Appendix A6 Design of test report.
Appendix A7 Design of agreement
Appendix A8 Design of product certificate for shafts.
Appendix A10 Guidelines for the measurement of grille openings in the match situation

Appendix B1 Drawing no. SPCR 011-B1 (Floorball stick)
Appendix B2 Drawing no. SPCR 011-B2 (Floorball stick blade)
Appendix B3 Drawing no. SPCR 011-B3 (Floorball ball)
Appendix B4 Drawing no. SPCR 011-B4 (Floorball goal)
Appendix B5 Drawing no. SPCR 011-B5 (Floorball rink)
Appendix B6 Drawing no. SPCR 011-B6 (Floorball stick blade)
Appendix B7 Drawing no. SPCR 011-B6 (Floorball goal, drop net)

Appendix C1 Drawing no. SPM 1506-C1 (Equipment for measuring blade.)
Appendix C2 Drawing no. SPM 1506-C2 (Floorball stick dimension)
Appendix C3 Drawing no. SPM 1506-C3 (Floorball stick blade dimension)
Appendix C4 Drawing no. SPM 1506-C4 (Equipment for deflection test)
Appendix C5 Drawing no. SPM 1506-C5 (Equipment for impact test)
Appendix C6 Drawing no. SPM 1506-C6 (Equipment for discoloration test)
Appendix C7 Drawing no. SPM 1506-C7 (Floorball ball dimension)
Appendix C8 Drawing no. SPM 1506-C8 (Equipment for ball rebound test)
Appendix C9 Drawing no. SPM 1506-C9 (Floorball goal dimension)

Appendix C10 Drawing no. SPM 1506-C10 (Floorball rink dimension)
Appendix C12 Drawing no. SPM 1506-C12 (Equipment for net size test on face protector and blade size on sticks)

Conditions for Certification of Floorball Equipment

0 The certification processes

0.1 Scope

The scope of the certification rules presented in this document is solely intended for Floorball equipment used for league play in accordance with IFF's rulebook. It contains technical requirements and procedures for continuous surveillance.

These certification rules comprise the following activities:

1. Evaluation of the products properties.
2. Setting up an agreement to ensure that type tested and approved equipment for floorball are manufactured according to SPCR 011, and that the manufacturer will comply with the latest issue of SPCR 011 in all aspects, and the criteria regarding continuous surveillance.
3. Issuing of a certificate.
4. Continuous surveillance of certified products by testing of samples taken from the manufacturers warehouse or bought from the open market.

when steps 1 and 2 are completed.
If products, e.g., face protectors, are covered by other regulations, such as EU Directives / Regulations, this will not be checked through this certification procedure.

0.2 Application

The process starts with an application from the manufacturer or supplier.

0.3 Review of application

When reviewing the application, RISE review that the application is complete, and that the application can be handled within this rule. The review may mean that RISE cannot accept the assignment, which is then communicated to the applicant with a justification. If the application is adopted, this is communicated to the applicant through an order confirmation.

0.4 Sampling and test samples

The manufacturer is responsible for the sampling. Test samples shall be representative of the normal production. If the test samples are prototypes, they shall be representative of the intended future production and shall be selected by the manufacturer. Additional verifying testing can be necessary from production if prototype samples are type-tested. When the certification shall cover a range of sizes, testing of samples in different sizes may be necessary.

0.5 Evaluation

During the evaluation process, the product is checked to ensure it has been manufactured in accordance with the technical data, and that it meets the requirements in section 2. The evaluation process includes tests and examinations that are carried out to the extent that the requirements specify. The evaluation includes a review of labelling and information to the user etc. In cases where the product and/or documentation shows deficiencies, i.e., does not meet the requirements, the evaluation may be cancelled.

The evaluation process also includes a check of the agreement about that the manufacturer will comply with the latest issue of SPCR 011 in all aspects, and the criteria regarding continuous surveillance is set up and signed.

0.6 Review and decision

The result of the evaluation is summarized, and the result is reviewed. If the result of the review is approved, the process proceeds to the decision phase. When a decision on certification has been taken, a certificate is issued to the applicant. The certificate will also be listed on RISE or IFFs website with information about the certified product and the manufacturer. The certificate document will not be published.

0.7 Certificate

The validity of the certificate presumes that no changes are made to the certified product, that the certification rules are not modified and that the requirements for certification are continuously fulfilled. See sections 2-5.

1 Requirements, general

All corresponding related to testing and certification shall be done in written English.

1.1 Requirements and rules

1.1.1 Application

Application for certification is to be made in writing and should be accompanied by:

- **Technical data** including test report, drawings, product description(s), assembly instructions if required etc. These documents are to contain the following information:
    - **Test report.** The test report is to demonstrate that the technical requirements are met in accordance with chapter 2. The report should not be more than two years old on application.
    - **Drawings.** The main drawing with the dimensions specified by SP-method 1506 being the minimum.
    - **Product description.** Description of primary material content unless included in the drawing.
    - **Assembly instructions.** Required for sideboards, goals, and face protectors.
    - **Miscellaneous**. Drawings, product descriptions and assembly instructions are to be provided with name or number and with the date as well as latest revision date.
- **Declaration** from the manufacturer that the in-house inspection will ensure that only products meeting the requirements will be placed on the market, bearing the mark.
- **Proposal for marking** according to section 1.2
  (see also appendix A4, Application form for certification).

A non-complete application can mean that RISE will reject the application.

1.1.2 Supplier´s In-House Inspection

The supplier shall have an internal inspection system and shall, on request, provide details of the system. See chapter 3.

1.1.3 Agreement

An agreement must be reached between RISE and the supplier. See appendix A7.

1.1.4 Period of Validity for Certificate

The period of validity for certificate is five years. The holder of the certificate will be notified three months before the certificate is due to expire and asked which certificates (if any) he wishes to be extended. The period of validity can be extended after application from certificate holder followed by a limited evaluation. Presuming that the products are not modified, the certification rules are not significantly changed, and the surveillance has been performed without remarks, the extension can be done without further testing. If there have been any changes, a new testing can be necessary. The testing will then be limited to the parts that are changed.

1.1.5 Modification of Certified Product

The holder of the certificate shall, before making any alteration to the design or materials, notify RISE in writing of such intended alterations. RISE will decide on the resulting necessary response: examples of such response include renewed testing and modification of the certificate.
A change of product name will result in a need to modify the certificate. Certificates may show several names for the same product. It applies to balls, goals, rinks, face protectors and goggles. For sticks, all modification of brand and model names that are connected to the certificate will be done by revising the database of certified Floorball equipment.

1.1.6 Rules for transfer of a brand/s to other company and responsibility before new certificates can be issued

The reason for the transfer of brand/s to other companies can be e.g., due to takeovers, license withdrawal, bankruptcy, etc.
In a transfer of a brand/s, in addition to the general rules (see section 5.6), the new company must take responsibility for the brand/s outstanding debt related to the IFF-marking system, before the new certificates can be issued.

1.1.7 Rules for current license holders before new certificates can be issued

Current license holders must take responsibility for outstanding debt related to both testing / certification and the IFF-marking system, before the new or revised certificates can be issued.

1.1.8 Rules for current license holders with payment problems and debts to IFF/RISE over 5.000 CHF

Any license holders, with outstanding debts for more than 5.000 CHF to IFF/RISE will be put on notice and will need to pre-pay the marking costs (see also section 1.3.1) and testing costs.
As a second step IFF will decide a final pay date for all the existing debts. If the debts are not paid by then, IFF will not allow the licence holder to test new products, Test Stop.
The Test Stop can only be lifted by decision of IFF.

1.1.9 Rules for exemptions

The number of exemptions should be kept as low as possible, to simplify the situation for the referees.
Many exemptions also weaken the system of Certified Floorball Equipment.
But in some cases, dispenser may need to be used, and these cases are listed below:

Apply for an exemption is possible in the following cases:
- If a new requirement is introduced and new ways of working is needed.
- If a new requirement is introduced and engraving is needed,
- If a new requirement is introduced and long lead times are required.
- Minor deviations from the requirements that are deemed to still be safe to play with.

Apply for an exemption is not possible in the following cases:
- Requests to mix shafts and blades between different brands.
- Requests to sell out stocks.

An administrative fee of CHF 300 is to be paid for each exemption.

1.2 IFF-Marking, general

Marking is to contain the certification mark as shown below. Stick manufacturers can print the certification mark as a part of the Brand name / Model name sticker / print, see section 1.3.1
The certification mark's type and placement for each product type is to be in line with the following:

Stick	sticker on the shaft of the stick, between the grip binding and shaft / blade attachment point. See section 1.3.
Blade	embossed mark on the blade's surface, see section 1.3.5.
Ball	embossed mark on the ball's surface, see section 1.4.
Goals	sticker around the goal crossbar, see section 1.5.
Rink	sticker on the back of each sideboard section, See section. 1.6.

Sizes: 37±2 mm x 15±2 mm or as specified in the design below, for sticks.
45 x 19 mm, face protectors.
90 x 38 mm, for goals and rinks.
(see appendix A5, Order form for certification marks).

Certification marking for Goals and Rinks

Certification marking for sticks.
(layout of the self-printed black and white version)

Certification marking for sticks.
(optional layout of the self-printed black and white version)

Certification marking for sticks.
(optional layout of the self-printed black and white version)

XXXXXX = The certification- or family certification- number of the stick.
YY = The manufacturing year.

From May 1, 2022, a slightly changed certificate numbering will be started for new companies.
FXXXXX = The certification number of the stick.
YY = The manufacturing year.

E.g. 105804/22 or F00101/22
Products that have been certified and began production of the period October to December are permitted to be labelled with the following year marking.

Technical information:

Size	**Colour code**		
37±2 mm x 15±2 mm.	Teal	CMYK	81 / 0 / 39 / 0
	Teal	PANTONE	326

1.2.1 Non-acceptable brand names / model names

To avoid misunderstandings / incorrect market advantages, etc. of words or expressions that can be, without a specific IFF permission, perceived as the IFF agrees / favours one product before others. A list of non-acceptable words or expressions are listed below.
The listing is not comprehensive, so in case of any doubt contact the IFF for a statement.

List of non-acceptable words or expressions
International Floorball, IFF, WFC, World Championship, Euro Championship, Asia Championship, World Floorball, Tournament, Global, Recommended, Game, etc.

1.2.2 Accounting reports

Three time a year the manufacturers will have to send in accounting reports of the quantity of sold Floorball sticks and balls with certification marking during the following periods:

- January – April, accounting reports must be sent in at latest May 21st.
- May – August, accounting reports must be sent in at latest September 21st.
- September – December, accounting reports must be sent in at latest January 21st following year.

The accounting report form will be available for downloading from Manufactures Information Web Site. The manufacturer's person authorized to sign for the company as well as the companies Certified public accountant must sign the accounting report. The accounting report must be RISE available within three weeks after each period. See also section 4.6.5 concerning sanctions.

It is very essential that these reports for sticks and balls are correct and sent in time.

1.2.3 New IFF logo

The new official IFF certification mark design is now available for download, in various formats, on the Manufactures Information Web Site. For companies who have adopted the new marking system must not later than 1st of July 2018, use the new design.

1.3 Stick, Shaft and Blade

Marking is to contain the certification mark as shown in point 1.2. Stick manufactures can print the certification mark as a part of the Brand name / Model name sticker / print.
The certification mark placement for each stick, blade is to be in line with the following:

Stick	Sticker on the shaft of the stick, between the grip binding and shaft / blade attachment point.
Blade	Embossed mark on the blade's surface.
Sizes:	37±2 mm x 15±2 mm, for sticks. (see appendix A5, Order form for certification marks).

1.3.1 Marking of stick

For new companies, in the first year after received its first certificate the IFF-mark must be purchased and applied to the shaft.
In the first year, it is appropriate that a marking proposal include the IFF-mark are developed. The proposal must be presented and approved by the certification body (RISE).
If the company would prefer to continue to purchase IFF-mark, it is also an opportunity.

From year two and with an approved marking proposal, it is possible to switch over to self-printing the certification mark as a part of the Brand name / Model name sticker / print.

If companies do not pay for the reported number of sold IFF-marked products in time and have debts exceeding CHF 5,000, the possibility of self-marking will be withdrawn. The company must return to purchase the IFF-mark and advance payment will be used.

The brand name in question shall be included as a prefix- or a suffix in the name of the stick and the blade shall be marked accordingly with the brand name. The sticker / print must be performed in a resistant material, e.g., paper, and similar materials are not allowed. The manufacturer is not allowed to change the dimension of the mark more than within below stated sizes, not change the design, colour, grey scale, or black and white version of the mark. The background of the mark must not be white or transparent but have a good contrast to the IFF logotype, text, and number, either it is performed in colour, grey scale or black and white. The number on the certification mark is to be the same as the stick's certification number or the family-certification number followed by manufacturing year.

1.3.2 General Rules for the Floorball Stick

Any combination of shafts and blades between different brands are not allowed. Further, it is not permitted to sell or use IFF-certified and approved shafts with non-approved or non-IFF-marked blades. Nor is it permitted to sell or use non-approved shafts together with IFF-marked and approved blades or non-approved blades that are still IFF-marked.
All the above combinations are therefore not allowed to be sold on the marked or used in any official matches. It is of utmost importance that these rules are to be followed.
All legal combinations of shafts/blades can be found in the database for certified equipment on IFF's homepage.
If a shaft is to be shorted; the shaft must be shorted from the top of the shaft. It is not legal to shortening the shaft from the bottom (shaft/blade connection point) of the shaft.

1.3.3 Name of certificate holder

Name of certificate holder is to be printed on the sticks. The name can be shown as company name and telephone No. and/or an internet address. The font size must be readable and preferably be placed on the backside of the shaft.

1.3.4 Uniformed stick measurement

The length of the stick must be uniformed. The length to be communicated to the customers is the length of the stick measured as described in appendix A1 section 5.2.4. Stick length can be but do not need to be printed on the shaft; the stick length can be shown on a separate sticker or on the knob. Make sure that all new sticks produced after July 1st, 2014 is carrying the new uniformed stick measurement.

1.3.5 Embossed mark for blade

The IFF-mark must be shown as an embossed marking on the blade. The font size must be 5 mm. Make sure that all new moulding tools are carrying the IFF-mark.
The brand name of the blade must be shown as an embossed marking on the blade. The font size must be at least 5 mm in height. Make sure that all new moulding tools have the brand name engraved and all blades are carrying the brand name. Companies can apply for an exemption from the marking for a period of maximum two years.

Embossed Certification mark for blade

IFF Embossed Certification mark
The official IFF certification mark design for embossed marking of blade is available for download, on the Manufactures Information Web Site.

1.3.6 Shaft certificate

All brand/model names linked to the shaft certificate are to be found both in the certificate and in the database of Certified Floorball Equipment. The shafts characteristics are only shown in the shaft certificate.
All brand/model names placed on the market must be registered both in the certificate and in the database.

1.4 Ball, Marking and Rules

Marking is to contain the certification mark as shown below. The certification mark placement for the ball is to be in line with the following:
Ball Embossed mark on the ball's surface.
Size: Readable.

1.4.1 Embossed mark for ball

The IFF-mark must be shown as an embossed marking on the ball. The font size must be readable. All new moulding tools for balls must adopt the new marking requirement.
Companies must gradual replace the old embossed IFF logo, the final date was set to June 30th, 2016.

Embossed Certification mark for ball

IFF Embossed Certification mark
The official IFF certification mark design for embossed marking of blade is available for download, on the Manufactures Information Web Site.

1.4.2 Ball colour

IFF reserves the exclusive right to the colour of the official IFF Match ball. If IFF decides to use its exclusive right, it will have to be made for two years at the time and included in the Material Regulations.

1.5 Goal, Marking and Rules

Marking is to contain the certification mark as shown below
The certification mark placement for the goal is to be in line with the following:
Goal Sticker around the goal crossbar.
Size: 90 x 38 mm, for goals and rinks
(see appendix A5, Order form for certification marks).

1.5.1 Name of certificate holder

Name of certificate holder is to be printed on the goals. The name can be shown as company name and telephone No. and/or an internet address. The font size for goals must be readable and preferably be placed on the backside of the goal.

1.6 Rinks, Marking and Rules

Marking is to contain the certification mark as shown below
The certification mark placement for the rink is to be in line with the following:
Rink: sticker on the back of each sideboard section.
Size: 90 x 38 mm, for goals and rinks
(see appendix A5, Order form for certification marks).

1.6.1 Name of certificate holder

Name of certificate holder is to be printed on the rinks. The name can be shown as company name and telephone No. and/or an internet address. The font size for rinks must be readable and preferably be placed on the backside of the rink. The rink corner sections need to be marked; all other rink sections are optionally.

1.7 Face Protector grille, Embossed marking

The testing and certification of the Face Proyector Grille will be handled via "RISE MET 5681, Face Protectors for Floorball goalkeepers". But the IFF-mark must still be shown on the left side of the Face Protector grill. The font size must be readable, see also section 2.5.1. and RISE MET 5681, Face Protectors for Floorball goalkeepers".

Embossed Certification mark for Face Protector grille

IFF Embossed Certification mark
The official IFF certification mark design for embossed marking of blade is available for download, on the Manufactures Information Web Site.

1.8 Floorball Accessories

Floorball accessories can, on voluntary basis, be accepted for sanctioned use together with certified Floorball equipment, under special circumstances. The special circumstances and technical requirement will be published on IFF Floorball Equipment web site in each specific case. The acceptance fulfils IFF's requirements for using IFF's logotype together with following text "Recommended by IFF" on the specified Floorball accessories, package, and promotion material. All upcoming and accepted Floorball accessories will be listed on IFF's Floorball Equipment web site. The list will show type of accessories and the limitation of use and/or a recommendation when to use it.

2 Technical Requirements - Type Testing and Criteria

Type testing is carried out with reference to certain attributes as follows:
(see appendix A3, Application form for testing).

2.1 Stick incl. the Blade

Sticks (6 items of each type) are tested according to SP-method 1506, point 5.2 (see appendix A1), and are assessed according to the following requirements.
All the tested sticks are to meet the requirements.

2.1.1 Stick Design

To avoid injury to other players, the stick is to be designed without rough edges, protruding supports or other sharp parts of the shaft or blade of the stick. The stick is to be designed as one-piece. If the stick is not designed as one-piece, the blade is to have a fixed mounting to the shaft by means of prefabricated hole, using rivet or screw (unfixed, snap lock, etc. are prohibited). For straightness (see appendix B1) - the stick shaft is, when unloaded, to be fitted within two imaginary parallel lines. The distance between the lines is to be 50 mm. The grip line is to be marked for minimum 80 % of the shaft circumference. The grip line is to have a good contrast to the background colour.
The stick is to be carrying the uniformed length measuring system as described in section 1.3.2.6 and appendix A1 section 5.2.4.
The stick blade main construction and outermost surface is to be produced in thermoplastic materials without fillers or reinforcements such as e.g., milled fibres. This is to ensure that the blade does not damage the playing surface. It is permissibly to use colour pigments. Antioxidants, UV-absorbing additives etc. can also be used to prevent polymer degradation.
The blade construction can consist of other plastic materials/laminates than the used thermoplastic materials.
The other plastic materials/laminates are to be centred in the middle of the blade, and may not be placed closer to the blade edge (playing surface) than the thickness of the lower blade frame or a minimum distance of 4 mm. This is to ensure that the playing surface is not damaged when the blade material is worn out. Make sure that the other plastic materials/laminates will be well anchored (moulded) into the surrounding blade structure and that all the edges are protected.
The other plastic materials/laminates are limited to 1/3* of the blades total area* but shall not cover the entire upper part of the blade horizontally. The ability to twist and hook the blade must be maintained. Otherwise, it can be placed where the manufacturer chooses. (see appendix B6).
The largest single open area of the other plastic materials/laminates is limited to 5 cm^2. The other plastic materials/laminates may have a larger total area but then need to be covered with one or more blade grooves; so, no single open areas are exceeded.
The other plastic materials/laminates should always be protected by a surrounding thermoplastic material and may never be the outermost material, which first meets the ball, another stick, etc. either on the forehand or backhand side.
The limitations will protect the playing surface, secure the blade to be able to twist when stepped upon must allow hooking of the blade.
The blade is to have embossed prints. The marking is to be of such proportions and design that the information is clearly visible and is not removed under play. The print size may not be less than 5 mm in height. The embossed print is to be uncoloured.

* The manufacturer must provide the test house the blade's total area and the area of other plastic materials/laminates used in the blade. Preferably by a calculation performed via the CAD-program and shown in the drawing.

2.1.2 Stick Weight

The complete stick incl. the blade must not weigh more than 380 g with binding.

2.1.3 Stick Dimensions

The stick is to be designed with dimensions according to appendices B1 and B2.
The shaft may be strapped above the grip line, but approval marks or other possible official marks must not be covered. It is permissible to divide the grip binding into two or more parts. The shaft must have a knob closing it. It is permissible to have other shaping (e.g., hexagonal, octahedral) on the upper 50 % of the shaft length. The upper 50 % of the shaft length must be covered by a grip binding if the shaft's curve radius is less than 6 mm.

The dimensions must conform to the standard.

a) stick length	max 1140 mm
b) the shaft's curve radius	min 6 mm
c) the shaft's diameter	max 35 mm
d) length to grip line marking	375 $^{+20}/_{-20}$ mm
e) width of grip line design	min 2 mm and max 40 mm *
f) blade bottom edge radius	max 270 mm
g) blade edge radius	min 2 mm
h) blade length	max 270 mm
i) blade thickness	min 8 mm
j) blade height	min 72 mm and max 80 mm and passing through blade height measuring device.
k) blade penetration depth	max 20 mm
l) blade concavity depth	max 12 mm
m) shaft straightness	within 50 mm

* It is still legal to use a 10 mm wide grip line marking.

2.1.4 Shaft Rigidity

2.1.4.1 Shaft Rigidity Method A, shafts 850mm to 1040mm (sticks 950mm – 1140mm).

The shaft should deflect by at least 23 mm under a load of 300 N measured as mean value of three deflections in each direction (horizontal and vertical). No individual value may be less than 17 mm for the most rigid direction of the shaft. The shaft should and tolerate a deflection of at least 60 mm in the most flexible direction without cracking or fracturing. The shaft's resulting deformation following deflection should not exceed 6 mm.

2.1.4.2 Shaft Rigidity Method B, shafts 650mm to 849mm (sticks 750mm – 949mm).

The shaft should deflect by at least 10 mm under a load of 300 N measured as mean value of three deflections in each direction (horizontal and vertical). No individual value may be less than 8 mm for the most rigid direction of the shaft. The shaft should and tolerate a deflection of at least 30 mm in the most flexible direction without cracking or fracturing. The shaft's resulting deformation following deflection should not exceed 3,5 mm.

2.1.5 Shaft and Blade Impact Strength

Shaft: Visible cracks or fractures should not occur.
Blade: Visible cracks, fractures, loose parts, or parts that fall away from the blade should not occur.

2.1.6 Blade Radii

The blade's peripheral radius should not be less than 2 mm.
The blade's bottom edge radius should not be greater than 270 mm.

2.1.7 Blade Discoloration onto Playing Surface

Discoloration on the playing surface should be no more than 10%. The discoloration shall be easily removed with the help of paper, water, and simple cleaning agent. The lacquered surface may have a slightly matt finish.

2.1.8 Blade Torsion Strength

Visible cracks, fractures, loose parts, or parts that fall away from the blade should not occur.

2.2 Ball

The balls (10 of each type) are tested according to the SP-method 1506, section 5.3 (see appendix A1), and are assessed according to the following requirements. The ball can have only one colour outside and can have a second colour inside. IFF approves balls for IFF events and have reserves the exclusivity for its official match ball colours. (see paragraph 1.4.2).
National federations can approve other than white, vanilla, or red balls for play in national series. All the tested balls are to meet the requirements.

2.2.1 Ball Weight

The ball is to weigh~~t~~ 23 ± 1 grams.

2.2.2 Ball Dimensions

The ball is to be designed with dimensions according to appendix B3.
The dimensions must conform to the standard.

a) ball diameter	72 ± 1 mm
b) hole diameter	10 ± 1 mm
c) the hole's internal placement at joint	no requirement
d) the hole's internal placement over joint	c/2 ± 2 mm

2.2.3 Ball Surface Fineness

The ball's surface is to be even, negative embossed pattern up to 0.5 mm are allowed, but the surface and negative embossed pattern fineness is to be between Ra 1—5 μm. Any protruding unevenness over 0.5 mm from the surface of the ball should not be present at the joint.

2.2.4 Number of Holes

The ball is to have 26 holes.

2.2.5 Breaking Stress

The ball's material is to tolerate a breaking stress of 6.0 N/mm^2 as a minimum, and 1.5 N/mm^2 over the joint.

2.2.6 Rebound

The ball's rebound is to be 790 ± 50 mm.

2.2.7 Ball Marking

The ball is to have a negative IFF embossed print (see also point 1.3.2.4). The marking is to be of such proportions and design that the information is clearly visible and is not removed under play. The negative embossed print is to have the same colour as the ball.
The ball can have one print or negative embossed print in direct connection to the joint, showing the manufactures name or the product name. The font size must be maximum 5 mm in height. The print or negative embossed print can have a different colour. The prints should not take up more than 1/10th of the ball's surface.

2.3 Goal

Beside the official match goal (1600 x 1150 mm) three other goal sizes (1200 x 900 mm, 900 x 600 mm, and 600 x 450 mm) can be certified. Goals (1 of each type) are tested to SP-method 1506, section 5.4 (see appendix A1), and are assessed according to following requirements.

2.3.1 General Design

The goals are to be red and constructed with metal tubing. The goal is to be designed without a metal bar for holding the drop-net. If the goals are not designed as single unit, the metal tubes are to have a fixed mounting to each other by means of prefabricated holes, using self-locking screws or nuts (unfixed are prohibited). The fixed mounting is to have no sharp outstanding points. The drop net is to cover the entire width of the goal, be placed 200 ± 25 mm behind the goal frame bar and permanently fixed at the top. There is no restriction regarding net colours.

2.3.2 Goal Dimensions

The goal is to be designed with dimensions according to appendix B4. The radii of the goal, excluding those at the base of the goal, should not be under the diameter of the tubing. All the dimensions must conform to the standard.

	1600 x 1150	1200 x 900	900 x 600	600 x 450
a) goal width	1600 ± 5 mm	1200 ± 5 mm	900 ± 5 mm	600 ± 5 mm
b) goal height	1150 ± 5 mm	900 ± 5 mm	600 ± 5 mm	450 ± 5 mm
c) back bar diameter	20 ± 2 mm	20 ± 2 mm	20 ± 2 mm	20 ± 2 mm
d) goal frame diameter	32 ± 1 mm	22 ± 2 mm	22 ± 2 mm	22 ± 2 mm
e) lower goal depth	650 ± 20 mm	520 ± 20 mm	480 ± 20 mm	420 ± 20 mm
f) goal corner radius	100 ± 20 mm (radius of central axis)			
g) upper goal depth	400 ± 50 mm	350 ± 50 mm	300 ± 50 mm	250 ± 50 mm

2.3.3 Goal Weight

The goal with net is to weigh:	1600 x 1150	1200 x 900	900 x 600	600 x 450
	12 ± 1.0 kg	6 ± 1.0 kg	3 ± 0,5 kg	3 ± 0,5 kg

2.3.4 Pad Discoloration onto Playing Surface

The pads should not leave traces of paint on the playing surface, apply to all goal sizes.
The pads are to be white.

2.3.5 Drop Net Strength

Net and fastening device are to be intact, apply to all goal sizes.

2.3.6 Net Mesh Size

2.3.7 The mesh should be min 40 x 40 mm and max 50 mm x 50 mm, apply to all goal sizes. Drop Net Length and Mounting / Positioning

The drop net length is to be such that the bottom edge hangs between a min of 0 mm and a max of 50 mm from the playing surface. The drop net shall be placed and fixed 200±25 mm behind the goal frame bar and looking from the front the drop net shall be fixed symmetrical in the middle in the goal and cover the entire width of the goal (see appendix B7), this applies to all goal sizes.

2.4 Rink

Rink (2 straight sections of each type) is tested according to SP-method 1506, point 5.5 (see appendix A1), and are assessed according to following requirements. All the tested rink sections are to meet the requirements. There is no restriction regarding rink colours.

2.4.1 Rink Dimensions

The rinks are to be designed with dimensions as shown in appendix B5. All the dimensions must conform to the standard.

a) rink height	500 ± 10 mm
b) distance from rink bottom edge to playing surface	max 6 mm (including pads etc.)

2.4.2 Rink Radii

The rinks are to be designed with dimensions as shown in appendix B5. All the dimensions must conform to the standard.

c) rink top edge radius	min 17.5 mm, rounded back edge
d) section edge radius	3 ± 1 mm
e) rink corner radius	2000 ± 500 mm

2.4.3 Rink Section Fitment

The rinks are to be designed with dimensions according to appendix B5. All the dimensions must conform to the standard.

f) rink width of joint	2 ± 2 mm
g) rink horizontal parallelism	2 ± 2 mm
h) rink vertical parallelism	2 ± 2 mm

2.4.4 Rink Surface Fineness

To avoid injury to players, the rinks are to be designed so that no rough edges, protruding supports, or other sharp objects are present.

2.4.5 Impact Test

Following the carrying out of tests, no rough edges, protruding supports or other sharp objects that could cause injury to players is to be evident.

2.4.6 Ball Rebound against Rink

Minimum 75 % rebound factor in accordance with appendix B5, section 2.2.6.

2.4.7 Rink weight per running meter

Maximum 5,5 kg

2.5 Face Protector Grille

The protection level is intended to protect against stick blade penetration and/or a direct hit from a ball and/or accidental hits by the stick blade.
Grilles mounted on a Face Protector are tested according to “RISE MET 5681, Face Protectors for Floorball goalkeepers”, and are assessed according to requirements set out in the test-method. The whole or part of the Face Protector grille can be produced of impact resistance, transparent plastic. All the tested Face Protector grilles are to meet the requirements.

Guidelines for the measurement of grille openings in the match situation (see appendix A10).

2.5.1 Face Protector Grille Marking

To avoid the face protector grille is changed to a non-approved grille, the grille must have a negative IFF embossed marking. The IFF-marking is to be stamped or broken through marking stamped onto or laser cut-out metal plate and welded/hard-soldered to the net, placed on the left side of the grille. The marking must be of such proportions and design that the information is clearly visible and is not removed under play.

2.5.2 Other Requisite Markings (only valid within the European Union)

A face Protector with a grille intended to be used in Floorball is considered as a Personal Protective Equipment, PPE. By that, it must be CE-marked and fulfil the requirements of Regulation (EU) 2016/425. There is no harmonised standard for Floorball face protectors’ grills, so RISE has developed an own test method, “RISE MET 5681, Face Protectors for Floorball goalkeepers” for those products, which makes it possible to issue an EU-type examination certificate.

3 Supplier's In-House Inspection

The supplier is to have an in-house inspection guaranteeing products marked with the certification mark meet the requirements in the certification rules. The certificate holder shall state this in a declaration.

The following testing and inspection procedures are to be included in the in-house inspection.

Product type	**Attribute** (testing and requirements, see chapter 2)	**Min allowed frequency**
Stick	design weight dimensions shaft rigidity	1/100 manufactured
Ball	weight dimensions surface fineness	1/1000 manufactured 1/100 manufactured *
Goals	dimensions weight	1/10 manufactured
Rink	dimensions radii fit surface fineness	1/10 manufactured

* for small quantities, less than 2500 balls apply 1/100 manufactured.

3.1 In-house journal

The model forms for internal records, as shown in section 3.1.1 - 3.1.5 are based on the minimum requirements in respect of manufacturer's own inspection that are required in accordance with SPCR 011. Manufacturers may naturally supplement these requirements with their own requirements or procedures.

3.1.1 In-house journal - Ball

Date		**Weight**	**Diameter**	**Hole diameter**	**Unevenness at joint**				**Sign**

3.1.2 In-house journal - Stick

Date	**IFF sticker No.**	**Design**	**Weight**	**Length**	**Length to grip line**	**Width of grip line**	**Shaft curve radius**	**Rigidity**	**Sign**

3.1.3 In-house journal - Goal

Date	IFF sticker No.	Weight	Width	Height					Sign

3.1.4 In-house journal - Rink

Date	IFF sticker No.	Height	Surface fineness	Top edge radius	Section edge radius	With at joint			Sign

4 Continuous surveillance

4.1 Application

Supervisory inspection is carried out by taking / or testing samples of products at the manufacturer's warehouse or by market surveillance. Checks are also made to all sampled certified products, to see if the brand and/or model is/are noted on certificates, if marking is correctly applied etc. The certificate holder may also report defects found during own inspection (see section 4.6).

Supervisory control means that the sampling and / or testing of the products is carried out at the manufacturer's warehouse for free and in according to a specified sampling / testing plan. The sampling of certified products can also take place by purchase on the open market and can be performed by RISE and / or IFF.

Supervisory inspection includes a requirement for the certificate holder to; on request submit inspection records for inspection.

4.2 Testing and Inspection

4.2.1 Sampling

Sampling shall be carried out in such a way as to ensure that all certified products are inspected approximately once in every five years.

Sampling volume and frequency plan

Product type	Product volume / year*	Frequency and Volume	No. of items to sample
Sticks	> 250 000 st > 200 000 st > 150 000 st > 100 000 st > 50 000 st > 25 000 st > 10 000 st > 5 000 st < 5 000 st	1 time / year, 8 models 1 time / year, 7 models 1 time / year, 6 models 1 time / year, 5 models 1 time / year, 4 models 1 time / 2 years, 3 models 1 time / 2 years, 2 model 1 time / 2 years, 1 model 1 time / 3 years, 1 model	3 of each model.
Balls	---	1 time / 5 years, all models	5 of each model.
Goals	---	1 time / 5 years, all models	1 of each model.
Rinks	---	1 time / 5 years, all models	2 straight sections + 1 curve section.

* Based on last year's production figures.

4.2.2 Test methods and requirements

Testing in respect of the following characteristics will be carried out in accordance with SP-Method 1506, and the results will be assessed as described in Chapter 2.

Product type	Attribute
Sticks	design dimensions (a-, b-, c-, d-, f- and h- dimensions) shaft rigidity shaft impact strength

Balls	weight dimension (the a- dimension) surface fineness (at the joint) breaking stress rebound
Goals	dimensions drop net length weight
Rinks	dimensions radii section fit

4.2.3 Inspection of marked equipment

Supervisory inspection of certified products involves inspection of all marked equipment at the place of sampling or purchased, to determine whether the make and/or type of equipment are recorded on the certificate, if marking is correctly applied etc.

4.2.4 Examination of after request submitted inspection records

Supervisory inspection includes a requirement for the certificate holder to; after request submit inspection records for inspection.

4.3 Responses if products fail testing

4.3.1 Renewed testing

If surveillance testing of a certified product gives negative results:

- the product shall be retested within two months.
- samples of products will be taken by market surveillance or directly from the holder of the certificate.
- the holder of the certificate will be asked to state, in writing, the reasons for the negative results, and
- to submit a copy of the company's inspection records for the product concerned.

4.3.2 Results of renewed testing

4.3.2.1 Positive results of renewed testing

The holder of the certificate will be notified in writing that no further actions will be taken, except that a lower sanctions fee as described in section 4.6.1 - 4 will be applied.

4.3.2.2 Negative results of renewed testing

The holder of the certificate will be notified in writing that the IFF Central Board will decide on sanctions in accordance with section 4.6.1 - 4 The severity of the sanctions will be related to the seriousness of the negative results. The higher scale of the sanction fee will be used.

4.4 Responses if products fail inspection

4.4.1 Failed inspection

If inspection of the product or certified product gives negative results, the holder of the certificate will be asked to state, in writing, the reasons for the negative results.

4.4.2 Results of examination of the written presentation

4.4.2.1 Positive results of examination of the written presentation

The holder of the certificate will be notified in writing that no further actions will be taken, except that a lower sanctions fee as described in section 4.6.1 - 4 will be applied.

4.4.2.2 Negative results of examination of the written presentation

The holder of the certificate will be notified in writing that the IFF Central Board will decide on sanctions in accordance with section 6.4. 1 – 4. Sanctions will be appropriate to the seriousness of the negative results. The higher scale of the sanction fee will be used.

4.5 Responses if submitted inspection records are not approved

The holder of the certificate will be notified in writing of shortcomings found in the inspection records. The holder of the certificate will be asked to submit, in writing, explanations for the shortcomings, with information on corrective measures applied.

4.5.1 Assessment of corrective measures applied

1. The written presentation by the holder of the certificate describing the corrective measures applied is regarded as fulfilling the requirements, and no further steps will be taken.
2. The written presentation by the holder of the certificate describing the corrective measures applied is regarded as fulfilling the requirements, but the measures will be specifically assessed in connection with the next normal surveillance inspection.
3. The written presentation by the holder of the certificate describing the corrective measures applied is not regarded as satisfactory. A further written description is required, and/or an inspection visit.

4.6 Sanction System

The International Floorball Federation IFF has implemented a sanction system to be applied to manufacturers in the event of failure of the surveillance inspection of material, sale of non-compliant marked equipment, not sending in accounting reports in time and not paid the invoices within the stipulated time as follows:

1. Surveillance inspection will be performed in accordance with the present system and regulations (SPCR 011 Material Regulations).

2. The manufacturer will perform in-house inspection and respond in accordance with the requirements of Paragraph 3.
   If surveillance inspection finds failures of materials, the company shall in accordance with the SPCR 011 Material Regulations provide an explanation of why the material has failed and shall provide a copy of its in-house test and inspection records for examination.

3. If the explanation does not provide a clear and suitable answer to the question, the IFF Central Board Material Function will decide upon the sanction to be applied to the company in accordance with the sanction system. The sanction system consists of four different levels (see section 4.6.1 - 4).

4. If an accounting report has not been received within stipulated time, a sanction fee will be applied.
   The sanction system consists of four different levels (see section 4.6.5).

5. If an invoice has not been paid within stipulated time, a sanction fee will be applied.
   The sanction system consists of four different levels (see section 4.6.6).

6. Certificates can with immediate effect temporarily be recalled. Temporarily recalled certificates will be published on IFF's website (see section 4.6.6.4 and section 5.7).

7. Revenue from sanction penalties shall be used to develop Floorball in accordance with IFF Development Board decisions. Sanction penalties must be paid to the IFF account within 30 days of the IFF Central Board decision.

The IFF Central Board will inform its member Associations and the companies about any decision made by the Central Board in material questions. All information regarding these questions is strictly confidential until the decision is made.

IFF reserves the right to adjust and / or update the sanction system on yearly basis.

4.6.1 Level 0

4.6.1.1 Types of non-compliances (first time discovered)

Typical examples of Level 0 non-compliances:

All items - discovered not to have name of certificate holder printed on the product, valid for stick, goal, rink, and face protector.
Stick - discovered not to have annual rate on the self-printed sticker.
Stick - discovered not to fulfil IFF-sticker design requirement on the self-printed sticker.
Stick - discovered not to fulfil the information of the new stick measuring system.

4.6.1.2 Action/Timetable

- The manufacturer to find the reason for the non-compliance and correct it within four weeks.
- Documentation of corrections to be sent to RISE within the same four weeks.
- IFF to decide.

4.6.1.3 Penalty

- If RISE finds the non-compliance during surveillance inspection, the penalty is admonition in written.

4.6.2 Level 1

4.6.2.1 Types of non-compliances

Typical examples of Level 1 non-compliances:

All items - discovered not to have name of certificate holder printed on the product, valid for stick, goal, rink, and face protector (repeated violation).
Stick - discovered not to have annual rate on the self-printed sticker (repeated violation).
Stick - discovered not to fulfil IFF-sticker design requirement on the self-printed sticker (repeated violation).
Stick - discovered not to fulfil the information of the new stick measuring system (repeated violation).
Blade - no embossed IFF-marking on the blade (repeated violation).
Blade - no embossed brand-marking on the blade (repeated violation).
Stick - incorrect grip-line placing and/or design.
Stick - protruding screws exceeding + 1,0 mm.
Blade - protruding plastic blip exceeding + 1,0 mm.
Ball - protruding plastic blip exceeding + 0,5 mm.
Goal - protruding metallic blip exceeding +1,0 mm.
Rink - protruding plastic/metallic blip exceeding + 1,0mm.

4.6.2.2 Action/Timetable

- The manufacturer to find the reason for the non-compliance and correct it within four weeks.
- Documentation of corrections to be sent to RISE within the same four weeks.
- IFF to decide.

4.6.2.3 Penalty

- If RISE finds the non-compliance during surveillance inspection, the penalty is in the range of a minimum of CHF 500 to a maximum of CHF 2,000.

4.6.3 Level 2

4.6.3.1 Types of non-compliances

Typical examples of Level 2 non-compliances:

All items - IFF-mark exceeding rules and measurements as set out in SPCR 011.
All items - IFF-mark discovered not to have been registered.
Stick - discovered not to fulfil IFF-sticker design requirement on the self-printed sticker (if found to be intentional).
All items - IFF-mark discovered not fulfilling the requirement for the marking of brand name.
All items - IFF-mark discovered to have incorrect certification number.
Face protector - exceeding the required dimension on maximum two face protector's grille openings.
Stick - incorrect grip-line placing and/or design. (if found to be intentional and/or a repeated violation).
Stick - protruding screws exceeding + 1,0 mm. (if found to be intentional and/or a repeated violation).
Blade - protruding plastic blip exceeding + 1,0 mm. (if found to be intentional and/or a repeated violation).
Ball - protruding plastic blip exceeding + 0,5 mm. (if found to be intentional and/or a repeated violation).
Goal - protruding metallic blip exceeding +1,0 mm. (if found to be intentional and/or a repeated violation).
Rink - protruding plastic/metallic blip exceeding + 1,0mm. (if found to be intentional and/or a repeated violation).
Stick - exceeding the total weight.
Blade - blade colour discovered not to have been tested.
Stick - exceeding the total length.
Stick - Shaft stiffer than allowed in the rules.
Stick - Breakpoint lower than allowed in the rules.
Blade - exceeding size measurements of the blade by over 1 % due to defective injection moulding.
Blade - R2 external radius, bottom radius R270.
Ball – exceeding/underpass the total weigh.
Ball - exceeding the required dimensions, breaking stress and rebound.
Goal - exceeding the total weight and required dimensions.
Rink - exceeding the required dimensions, radius, and section fitment.

4.6.3.2 Action/Timetable

- The manufacturer to find the reason for the non-compliance and correct it within four weeks.
- Documentation of corrections to be sent to RISE within the same four weeks.
- IFF to decide.

4.6.3.3 Penalty

- If RISE finds the non-compliance during surveillance inspection, the penalty is in the range of a minimum of CHF 1.000 to a maximum of CHF 4.000.

4.6.4 Level 3

4.6.4.1 Types of non-compliances

Typical examples of Level 3 non-compliances:

All items - IFF-mark discovered not to have been certified.
All items - IFF-mark discovered not to have been tested.
All items - IFF-mark items that have passed the SPCR 011 rules, and then have afterwards been changed such that they no longer comply with the rules, so that the manufacturer is in clear breach of the SPCR 011 rules.
Face protector - exceeding the required dimension on face protector's grille openings and impact strength.
Stick - Exceeding the total length (if found to be intentional and/or a repeated violation).
Stick - Shaft stiffer than allowed in the rules (if found to be intentional and/or a repeated violation).
Stick - Breakpoint lower than allowed in the rules (if found to be intentional and/or a repeated violation).

4.6.4.2 Action/Timetable

- The manufacturer to find the reason for the non-compliance and correct it within four weeks.
- Documentation of corrections to be sent to RISE within the same four weeks.
- IFF to decide.

4.6.4.3 Publication

A publication of the incident on IFF's web site

4.6.4.4 Publication/Penalty

- If RISE finds the non-compliance during surveillance inspection, the penalty is in the range of a minimum of CHF 2.500 to a maximum of CHF 10.000.
- The manufacturer's certificate will be withdrawn, after a written resolution from IFF, if the non-compliance has not been corrected and reported back to RISE within eight weeks
- A new certificate can be applied for to RISE or another test institute (see Appendix A2).
- Publication of a notice that the item does not comply with IFF rules and that any player should contact the company directly.
- IFF will send a list of failed items to all IFF member associations.

4.6.4.5 Additional rules

IFF can grant a longer timetable if it is needed to provide a fair chance of finding and correcting the non-compliance.

4.6.4.6 Waiver

Some players make their own sticks, swapping shafts and blades.
Some cut the shaft at the bottom to save the grip when adjusting the shaft length. This will have the effect of automatically making the position of the face-offline incorrect.
Manufacturers are responsible only for the original non-used item. If the blade, grip, or shaft is modified, the manufacturer accepts no responsibility for the result, and will not be held responsible. No penalty will be levied on the manufacturer, and no details will be published.

4.6.5 Sanctions for not sending accounting reports.

From 15th of March 2004 stick manufactures can print the certification mark directly on the stick. To ensure that the correct fee for the certification mark is calculated, the manufacturer must three times a year send accounting reports to RISE. The report for Jan-Apr must be sent before 21st of May, the report for May-Aug before 21st of Sep and the report for Sep-Dec before 21st of Jan.

Ball manufactures shall have an embossed pattern of the certification mark on the balls surface. To ensure that the correct fee for the certification mark is calculated, the manufacturer must three times a year send accounting reports to RISE. The report for the period Jan – April must be sent before 21st of May, for the period May – Aug before 21st of Sep and for the period Sep-Dec before 21st of Jan.
It is very essential that these reports are correct and sent in time.

If an accounting report has not been received, a reminder will be sent out the first working day after the report date.

Sanction fees for not paid the invoices within the stipulated time.
Days counted from the date after the invoice due day.

4.6.6 Level 1

Sanction for being 1-30 days late; interest* on overdue payment + CHF 50**.

4.6.7 Level 2

Sanction for being 31-60 days late; interest* on overdue payment + CHF 100**.

4.6.8 Level 3

Sanction for being 61-90 days late; interest* on overdue payment + CHF 150**.

4.6.9 Level 4

Sanction for not paid the invoices after more than 90 days or non-compliance with payment for sanctions in level 1-3. All certificates will be temporary withdrawn and not be shown in the database of Certified Floorball Equipment. A publication on IFF's website will refer to the fact that the company's all certificates are temporarily withdrawn. The equipment may not be used in any international matches or sanctioned series games and that players are asked to contact the company immediately.

* Interest = (payment x (reference rate + 8%)) / (360 x days since payment deadline).
** Compensation for recovery costs.

4.6.10 Supervisory inspection - Testing

- RISE will send a written report to the holder of the certificate on completion of testing.
- If the report is favourable, IFF will not be notified.
- If the report is unfavourable, IFF will be notified in writing, with a copy of the notification being sent to the holder of the certificate.

4.6.11 Supervisory inspection - Results of further testing

- RISE will send a written report to the holder of the certificate on completion of testing and will send a copy of the report to IFF.

4.6.12 Supervisory inspection - Failure of inspection

- RISE will send a written report to the holder of the certificate on completion of testing.
- IFF will be notified in writing, and a copy of this notification will be sent to the holder of the certificate.

4.6.13 Supervisory inspection - Inspection records

- RISE will send a written report to the holder of the certificate on completion of inspection.
- If the report is favourable, IFF will not be notified.
- If the report is unfavourable, IFF will be notified in writing, with a copy of the notification being sent to the holder of the certificate.

4.7 Miscellaneous

It is possible for any manufacturer of Floorball material to ask RISE or other test organisation (see appendix A2) to conduct any surveillance test of Floorball material according to SPCR 011 on their own expense.

5 Miscellaneous Conditions for Certification

5.1 General

The conditions in the certification rules herein are based on the principles established in RISE quality manual for certification. Subcontractors for type testing are to be approved by RISE Certification, see appendix A2.

5.2 Certificate Holder's Responsibility

The certificate holder is responsible for making sure the manufactured product covered by the certificate and marked with the certification mark conforms to the certified product according to the certificate in every respect, and that the products are suitable for their purpose and not capable of causing injury or inconvenience. This applies even if the certificate holder is not the supplier of the product.

5.3 Certificate Holder's Right to Use IFF's Certification Mark

The certificate holder has the right to mark the products covered by the certificate with the certification mark and, in addition, has the right to use the mark when advertising or for other promotion of the products. Advertising is not permitted where confusion could arise between marked and unmarked products.

5.4 RISE Responsibility

RISE is responsible for making sure the technical requirements in the certification rules are based on available knowledge and experience, recognised standards, or corresponding specifications and those they correspond to the International Floorball Federation's rules.

RISE is responsible for making sure that certified product – in accordance with reported documentation constituting the basis for the certificate – meet the requirements in the certification rules. RISE is not responsible for manufactured products.

5.5 Confidentiality

All information RISE has access to is to be confidential with the following exceptions:

- RISE – or associate partner to RISE – keep registers of applicable certificates. The registers contain information on the certificate holder, certificate number, certified products and period of validity.
- RISE has the right to make public all decisions on recall of certificate and misuse of certificate or marking.
- IFF is to be informed on an on-going basis as to applications and modifications to the certificate.

5.6 Certificate

Certificates are issued to the following product groups:

- Balls, where all ball models from the same brand name are placed.
- Shafts, where shaft models of the same construction type (material or shape) are placed, regardless of flex value.
- Blades, where all blade models from the same brand name are placed.
- Goals, where all goal models / sizes from the same brand name are placed.
- Rinks, where all rink models from the same brand name are placed.
- Face Protector, CE- marked, where all sizes of the same models and brand name are placed.
- Protective Eyewear, CE- marked, where all sizes of the same models and brand name are placed.

Certificates already issued will be valid until the expiration date. The merger into one certificate according to the proposal above will be done in connection with the next extension of the certificates.

The certificate is non-transferable. When transferring to another company, a new certificate is to be issued.

The design of the product certificate is outlined in appendix A8.

5.7 Recall of Certificate

RISE can, with immediate effect, permanently or temporarily, recall a certificate if:

a) a written resolution from IFF state that the certificate holder has, in some other way, failed to meet the conditions of the certificate; or
b) the certificate holder has misused RISE name in connection with products not meeting the necessary requirements; or
c) the certificate holder has not paid the certification fees within the stipulated time; or
d) the certificate holder has been declared bankrupt, gone into liquidation, or transferred operations; or
e) inaccuracies in the certificate come to light. However, the certificate holder is to be given reasonable time to readjust to changed circumstances, unless special reasons for another course of action are appropriate; or

IFF can, with immediate effect, by a written resolution, request RISE to, permanently or temporarily, recall a certificate if:

a) the certificate holder has used the IFF's certification mark in connection with products not meeting the necessary requirements; or
b) the certificate holder has used the certification mark for products not covered by the certificate; or
c) the subsequent surveillance resulted in failure; or
d) the certificate holder has, in some other way, failed to meet the conditions of the certificate; or
e) the certificate holder has not paid the invoices for the IFF's certification mark.
f) the certificate holder has not paid the sanction fees within the stipulated time; or
g) the product proves to be unsuitable for its purpose or can cause injury or inconvenience.

Misuse of the certification mark and/or the certificate can, in addition to the recall of the certificate, lead to legal action.

5.8 Certificate Holder's Undertaking on Recall of Certificate

The certificate holder, on notification of recall of his certificate either permanently or temporarily, is to:

a) immediately cease advertising or other promotional work relating to the certificate for the product in question.
b) make sure that all marking is removed from products in stock, if required by RISE.
c) pay all costs associated with replacing substandard products with those that meet the requirements in the current certification rules, if required by RISE.

5.9 Return of Certificate

For return of certificate, following temporary recall, the same rules apply as those for when the certificate was initially issued, see section 1.3. A renewed type testing process is not required if less than one year has passed since the certificate was recalled unless the certification rules or production conditions have altered.

5.10 Revised Certification Rules

RISE reserves the right to modify the certification rules. For extension of a certificate submitted in line with previous rules, the certificate holder is required to observe the revised rules. However, the certificate holder is to be given reasonable time to adjust to the revised rules, unless special reasons for another course of action are appropriate.

5.11 Fees

Fees for the initial assessment (certification), extension of period of validity and review of certificate are reported in a special price list and are to be paid by the certificate holder.

Fees for surveillance inspection are as per the rules in the agreement between the supplier and RISE.

Costs for other inspections according to section 5.12 are only charged to the certificate holder if the inspection shows that the requirements in the current certification rules have not been met.

5.12 Other Inspection

RISE has the right to carry out checks to see if products provided with the certification mark meet the requirements of the current certification rules whenever and wherever it deems necessary.

5.13 Appeals

Appeals against decisions made by RISE are to be made in writing to RISE. Consequent corrective measures resulting from any appeal are determined by RISE certification board.

SP-M 1506 Methods for Verification of Equipment Criteria for Floorball

Method Description

Prepared by Lars-Åke Henriksson

Issued 2021-04-15

RISE Research Institute of Sweden
Department of Chemistry and Materials Technology
Borås 2021-05-15

Abstract

The purpose of this document is to state valid criteria and corresponding testing methods to be used in connection with certification of Floorball equipment, dealing with sticks, balls, goals, and rinks. These rules, as well as methods, has been compiled by the RISE Research Institute of Sweden in collaboration with the Swedish Floorball Federation mainly in consideration of functional and safety requirements. In this version, the original criteria have been adjusted according to the instructions of the International Floorball Federation.

List of Contents

	Abstract	**2**
	List of Contents	**3 – 4**
	Summary	**5**
1	**Objective**	**6**
2	**Background**	**6**
3	**Purpose, Area of Use**	**6**
4	**References**	**6**
5	**Testing**	**7**
5.1	In General	7
5.1.1	Testing Climate	7
5.1.2	Length Measurement	7
5.1.3	Weight Measurement	7
5.2	Stick	7
5.2.1	Scope and Application	7
5.2.2	Stick Design	7
5.2.3	Stick Weight	8
5.2.4	Stick Dimensions	8
5.2.5	Shaft Rigidity	9
5.2.6	Shaft Impact Strength	10
5.2.7	Blade Radii	10
5.2.8	Blade Discoloration onto Playing Surface	11
5.2.9	Blade Torsion Test	11
5.3	Ball	12
5.3.1	Scope and Application	12
5.3.2	Ball Weight	12
5.3.3	Ball Dimensions	12
5.3.4	Ball Surface Fineness	13
5.3.5	Number of Holes	13
5.3.6	Breaking Stress of Material and Joint	13
5.3.7	Rebound	14
5.3.8	Ball Marking	15
5.4	Goal	15
5.4.1	Scope and Application	15
5.4.2	Goal Dimensions	15
5.4.3	Goal Weight	16
5.4.4	Pad Discoloration onto Playing Surface	16
5.4.5	Drop Net Strength	16
5.4.6	Net Mesh Size	17
5.4.7	Drop Net Length	17

5.5	Rinks	18
5.5.1	Scope and Application	18
5.5.2	Rink Dimensions	18
5.5.3	Rink Radii	18
5.5.4	Rink Section Fitment	19
5.5.5	Rink Surface Fineness	19
5.5.6	Impact Test	19
5.5.7	Ball Rebound from Rinks	20
5.5.8	Rink Weight per running meter	20
6	**Report**	**22 – 23**

Summary

The purpose of this document is to state valid criteria and corresponding testing methods to be used in connection with certification of Floorball equipment, dealing with sticks, balls, goals, rinks, and face protectors. These rules, as well as methods, has been compiled by the RISE Research Institute of Sweden in collaboration with the Swedish Floorball Federation mainly in consideration of functional and safety requirements. In this version, the original criteria have been adjusted according to the instructions of the International Floorball Federation.

1 Objective

The objective of this presentation is to describe applicable evaluation methods and requirement criteria for use in connection with certification of Floorball equipment. The methods described relate to sticks, balls, rinks, and goals. IFF and RISE have developed the methods, with the main emphasis on functional and safety aspects.

2 Background

Floorball is a new and growing sport, for which the equipment is characterised by a rapid rate of development and a richness of variety. It was against a similar background that, working in conjunction with RISE, the Swedish Floorball Association developed and introduced an approval scheme for Floorball equipment, the objective of which was to monitor and check the development of equipment. Approval of equipment was introduced in Sweden in 1993 and was progressively modified on basis of experience over the next five years.

This version of the approval scheme for Floorball equipment is based on the IFF's views of the Swedish system and on its decisions relating to the scheme. Equipment to be approved by the IFF Floorball Equipment Approval Scheme must meet the requirements in respect of initial type-testing and of subsequent unannounced inspection of/at the manufacturer's or importer's premises. The underlying methods of evaluation and performance requirement levels are, in all essential respects, the same as in earlier versions.

3 Purpose, Area of Use

Test methods and requirement criteria are intended to ensure the quality, characteristics, dimensions, and safety aspects of Floorball equipment, and form the basis for certification of Floorball equipment intended to display the IFF approval symbol.

4 References

ISO 291-1977 Standard atmospheres for conditioning and testing.

IFF Rules of the Game.

Swedish Ice Hockey Association testing methods.

ASTM D 2444-84 - Standard Test Method for Impact Resistance of Thermoplastic Pipe and Fittings by means of a Tup (Falling Weight)

ASTM D 4476-85 - Flexural Properties of Fibre Reinforce Pultruded Plastic Rods

BS 1892: Part 2: Section 2.11:1989 - Gymnasium equipment, Specification for practice and games netting and supporting trackways

ISO 8295 Plastics - Film and Sheeting - Determination of Coefficient of Friction

EN-ISO 10256 section 6.7 Determination of penetration characteristics

EN-ISO 10256 section 6.8 Face protectors - Determination of impact resistance

ISO 3274:1996 - Geometrical Product Specifications (GPS) -- Surface texture: Profile method -- Nominal characteristics of contact (stylus) instruments.

ISO 11562:1996 - Geometrical Product Specifications (GPS) -- Surface texture: Profile method -- Metrological characteristics of phase correct filters.

5 Testing

5.1 In General

If the Floorball equipment cannot be tested within the scope of the valid test method, i.e., due to specific product design, the institute has right to direct the applicant to IFF for a written statement of how the valid test methods and criteria shall be adjusted.
(see appendix A3, Application form for testing).

5.1.1 Testing Climate

The tests are to be carried out at 23 ± 2 °C and 50 ± 5 % RH unless otherwise stated.

5.1.2 Length Measurement

The following accuracy and rounding off factors are applicable unless otherwise stated:

≤ 100 mm	accuracy ± 0.1 mm, rounded off to 0.1 mm
≤ 1000 mm	accuracy ± 0.5 mm, rounded off to 1.0 mm
> 1000 mm	accuracy ± 1.0 mm, rounded off to 2.0 mm

5.1.3 Weight Measurement

The following accuracy and rounding off factors are applicable unless otherwise stated:

≤ 100 g	accuracy ± 0.1 g, rounded off to 0.1 g
≤ 1000 g	accuracy ± 0.5 g, rounded off to 1.0 g
≤ 10000 g	accuracy ± 1.0 g, rounded off to 2.0 g
> 10000 g	accuracy ± 10 g, rounded off to 0.1 kg

5.2 Stick

5.2.1 Scope and Application

The purpose of the tests detailed below is to guarantee the quality of the stick regarding design, weight, blade discoloration onto the playing surface and dimensions as well as certain mechanical attributes such as rigidity, impact strength and fracture susceptibility (shaft).

The dimensions of the blade of the stick and the size of the grille on the face protector are interconnected, for the purpose of preventing the blade from penetrating the face protector.

5.2.2 Stick Design

5.2.2.1 Equipment

Sponge of polyurethane.
(E.g., car sponge without detergent.)

5.2.2.2 Samples

Three sticks.

5.2.2.3 Implementation

The sticks are examined both visually and with the aid of a sponge. The sponge is applied to the surfaces to detect possible rough edges and sharp objects e.g., protruding supports or an edge radius below 2 mm. Any possible coupling between the shaft and blade is inspected with respect to its design.

5.2.2.4 Results

The occurrence of sharp objects and rough edges is reported.

5.2.3 Stick Weight

5.2.3.1 Equipment

Scales with an accuracy of ±0.5 g.

5.2.3.2 Samples

Three sticks.

5.2.3.3 Implementation

The weight of the sticks is determined by means of weighing scales. If the sticks weigh under 380 g including grip binding, the weight can be reported. If the sticks weigh over 380 g including grip binding, the grip must be removed, and the stick is re-weighed.

5.2.3.4 Results

Individual measurement values rounded off to 1 g are reported. If the value reported includes the grip binding this is to be specified in the report.

5.2.4 Stick Dimensions

5.2.4.1 Equipment

Suitable equipment for length measurements, e.g., steel rule, measuring tape, sliding callipers and equipment for measuring the blade's penetration depth as well as the blade's concavity depth and the blade height (appendix C1 and C12) with an accuracy factor specified in section 5.1.2.

5.2.4.2 Samples

Three sticks.

5.2.4.3 Implementation

Stick dimensions are measured according to appendices C2 and C3.
The blade's concavity depth is measured by placing the measuring device perpendicular to the lower edge radius. This is repeated along the entire length of the blade and the largest concave depth is recorded.

a) stick length
b) the shaft's curve radius
c) the shaft's diameter (max value)
d) the shaft's diameter
e) width of grip line / design marking
f) blade bottom edge radius
g) blade edge radius
h) blade length
i) blade thickness
j) blade height
k) blade penetration depth
l) blade concavity depth
m) shaft straightness

5.2.4.4 Results

Individual results reported are rounded off as specified in section 5.1.2.

5.2.5 Shaft Rigidity

5.2.5.1 Equipment

Universal testing machine with a velocity of 200 mm/min is used during testing.
Printer or similar device to determine the deflection for various load factors is connected.
Cylindrical supports mounted in bearings with 35± 10 mm diameter for 3-point deflection test with:
800 mm (method A, shafts 850mm or longer) or
600 mm (method B, shafts 650mm to 849mm)
between the centres of the supports. Cylinder with 35± 10 mm diameter is used for applying the force. All the cylindrical supports are to have a lowering mechanism with 15± 5 mm radius (appendix C4) where the shaft is located.

5.2.5.2 Samples

Six sticks.

5.2.5.3 Implementation

The stick is placed on the support without being attached. The load is applied by 200 mm/min in the middle of the shaft to a deflection of:
60 mm (method A) or
30 mm (method B)
whilst a force/displacement diagram is taken. The stick is to be loaded in 2 directions, with the point of the blade both vertical and horizontal. The shaft's resulting deformation following deflection is registered, whereby the value is read after 10 seconds. Three sticks are tested in each direction.

5.2.5.4 Results

Mean value of three deflections in each direction (horizontal and vertical) at 300 N rounded off to 5/10 mm. Any occurrence of fracture is to be reported; otherwise, the individual value of the force is reported at:
60 mm (method A) or
30 mm (method B) deflection in N.
The individual value of the resulting deformation following deflection is rounded off as specified in section 5.1.2.

5.2.6 Impact Strength

5.2.6.1 Equipment

Drop hammer with a weight of 350± 10 g. The head is to be of hardened steel and have a shape of a prism with triangular profile and with a longitudinal axis oriented horizontally - perpendicular
to direction of hammer movement. The bottom edge of the prism is to be a shape of semi-circle with a radius of 7 mm. A stand with a drop height of 1000 ± 5 mm, from where the hammer is to be able to fall freely. A mechanism for repeat releasing of the drop hammer. Test holder of aluminium or steel and designed as a V-block with a length of 150 mm and inner 90° angle, with enough depth to enable the shaft to lie in the dip and not on the edges. A flat surface of thick aluminium or steel is to be used for the blade test.

5.2.6.2 Samples

Three shafts and three blades. Those shafts tested as per point 5.2.5, where fracturing or any type of deformation did not occur can, in theory, be used for impact testing.

5.2.6.3 Implementation

The testing is carried out in two places on the shaft, 700 mm from the end of the shaft, and 40 mm from the blade attachment. The shaft is placed in the holder with the point of the stick blade vertical. The drop hammer is released from a height of 1000± 5 mm towards a point both 700 mm from the end of the shaft and 40 mm along the shaft taken from the blade attachment. The test is carried out on 3 shafts (appendix C5).
The blade is placed vertical by using support blocks and when placed flat on the surface. The drop hammer is released from a height of 1000± 5 mm towards a point in the middle of the blade's top edge and when in the centre of the blade. The test is carried out on 3 blades.

5.2.6.4 Results

The falling hammer could make a little spherically shaped imprint on the tested surface of the shaft and blade. This kind of imprint is permissible if neither visible cracks nor fractures occur. Any cracks, fractures, loose parts, or parts that fall away from the blade are to be reported.

5.2.7 Blade Radii

5.2.7.1 Equipment

Measurement devices with a radius of 2 mm and 270 mm.

5.2.7.2 Samples

Three blades.

5.2.7.3 Implementation

Using the 2 mm measuring device, the peripheral radii around the blade are checked.
Using the 270 mm measuring device, the bottom edge radius of the blade is checked.

5.2.7.4 Results

Occurrences of radii < 2 mm are reported.
Bottom edge radius > 270 mm is reported.

5.2.8 Blade Discoloration onto Playing Surface

5.2.8.1 Equipment

Pendulum apparatus described in appendix C6. The mass of the bar, weight and test bit are to be such
that the energy the stopping disc is met with is 36± 1 Nm. The spring constant C is $3.5 \cdot 10^4$ N/m. Lacquered sport parquet and Gerflor Taraflex Sport M Evolution 7,0 mm to be at least as high and at least as wide as the stopping disc. The sport parquet construction: At the bottom 6 mm plywood, intermediate layer 12 mm ribbed pinewood sheeting, wearing course 3.6 mm beech and five layers UV-hardened lacquer, Proteco (E.g., Tarkett Sport). Gerflor Taraflex construction: PVC sheets reinforced with fibreglass grid.

5.2.8.2 Samples

Three stick blades. The end of the blade truncated to length of 100 mm.

5.2.8.3 Implementation

The test bit is permanently mounted on the pendulum so that the end blade, when lowering the pendulum, moves towards the flooring sample 1/3rd from the top edge of the disc. The pendulum is released from an upright position. The flooring sample is inspected regarding discoloration – the European scale for colour coding is used as a colour reference. Three tests on each flooring samples are carried out: replacing the flooring sample or movement in the horizontal axis following each impact. Clean the flooring samples with water, a simple cleaner and paper before examination.

5.2.8.4 Results

Occurrence of discoloration onto the flooring samples are reported.

5.2.9 Blade Torsion Test

5.2.9.1 Equipment

An equipment to firmly secure the blade in the vertical position. An adjustable device that can be fitted over and cover the blade nose. A lever arm attached to the device as an aid when blade nose is to be twisted (as a lever, a torque wrench can be used), and a protractor.

5.2.9.2 Samples

Three stick blades.

5.2.9.3 Implementation

Mount the blade vertically, as close as possible to the shaft attachment point. Mount the adjustable device over the blade nose and adjust so that there is no clearance. Twist the blade to an angle of 45°, check with the protractor. The test is carried out on 3 blades.

5.2.9.4 Results

Occurrence of visible cracks, fractures, loose parts, or parts that fall away from the blade is reported.

5.3 Ball

5.3.1 Scope and Application

The purpose of the tests listed below is to guarantee the quality of the ball regarding weight, dimensions, rebound and strength.
All colours and colour combinations may be produced with embossed certification mark. Only white or red balls are allowed for use in league play, for other colours an exemption from IFF / Contest Committee is needed.

5.3.2 Ball Weight

5.3.2.1 Equipment

Scales with accuracy ±0.1 grams.

5.3.2.2 Samples

Five balls.

5.3.2.3 Implementation

A scale is used to determine the weight of balls.

5.3.2.4 Results

Results are reported as individual measured results, rounded off as specified in section 5.1.3.

5.3.3 Ball Dimensions

5.3.3.1 Equipment

Sliding callipers, 71 mm internal cylindrical gauge and a graded measuring device with an accuracy specified in section 5.1.2.

5.3.3.2 Samples

Five balls.

5.3.3.3 Implementation

The ball diameter is measured in 5 areas on each ball. The diameters of the holes are checked using the measuring device in 5 randomly selected holes for each ball. The holes' internal placement at the joint is checked using the sliding callipers. Five randomly selected holes for each ball are measured in relation to the distance to nearby holes on the opposite half of the ball (appendix C7).

a) ball diameter
b) hole diameter
c) internal placement of hole at joint
d) internal placement of hole over joint

5.3.3.4 Results

The results are reported as individual measurements for each ball rounded off to 0.2 mm.

5.3.4 Ball Surface Fineness

5.3.4.1 Equipment

Contact (stylus) instrument for measuring surface roughness and waviness (ISO 3274:1996) and sliding calliper.

5.3.4.2 Samples

Five balls.

5.3.4.3 Implementation

The surface fineness of the ball is determined by a contact (stylus) instrument. The negative embossed pattern fineness of the balls surface is measured if applicable as well as the depth of the pattern. Ball unevenness at the joint is measured using a sliding calliper.
Following parameters are used on the contact (stylus) instrument:
Measuring length: 6 mm
Form fit: LS-Arc (circular arc whose radius is determining according to the method of least squares)
Filter: Gaussian (ISO 11562:1996), cut-off: 0,25 mm (bandwidth 100:1)

5.3.4.4 Results

The average value of the surface fineness of the balls, the depth of the negative embossed pattern if applicable and possible unevenness at the joints is reported.

5.3.5 Number of Holes

5.3.5.1 Samples

Five balls.

5.3.5.2 Implementation

The number of holes in the ball is checked.

5.3.5.3 Results

The number of holes in the ball is reported.

5.3.6 Breaking Stress of Material and Joint

5.3.6.1 Equipment

Universal testing machine, with a speed of 100 mm/min under testing.
Printer or similar device for registering the force.

5.3.6.2 Samples

Samples according to ISO 37, type 3, are to be used. Four samples are taken of each of the five balls, two without joint and two with joint.

5.3.6.3 Implementation

The balls are dissected so that the best possible level surface is achieved for perforation of the samples. Following measurement of the cross section of the sample surfaces, the samples are mounted one by one in the tensile testing machine at a tensile speed of 100 mm/min. The force is registered at point of fracture. The sample tests are run individually for samples with and without joints.

5.3.6.4 Results

The results from the tests are reported individually as an average value of the breaking stress rounded off to 0.1 N/mm^2.

5.3.7 Rebound

5.3.7.1 Equipment

When testing, use a ball release device, which operates smoothly without imparting any spin to the ball and which allows the ball to be dropped vertically from the specified height (appendix C8).
Acoustic recording apparatus, comprising a microphone and timing device, and giving a reading accurate to within 1ms.
The device is to be activated acoustically by the sound from the first bounce of the ball and deactivated by the sound from the second bounce, the time between these events being denoted *T*, in seconds.

5.3.7.2 Samples

Five balls.

5.3.7.3 Implementation

Set the ball gate device at the appropriate drop height for the ball, 2000 ±10mm.
Ensure that the drop gate has a slight inclination and a hole with ∅73 ± 0,5 / 0mm and a length of 30 ±2mm where the ball will drop down.
Drop the ball through the ball gate onto a stable metal plate with a smooth surface of minimum size 500 x 500 mm and minimum thickness 10 mm.
The ball drop is to be at random.
If the second bounce is less than 50 mm from the edge of or outside the plate, exclude the drop and perform a new drop.
Record the time, T, between the first and second bounces.
Calculate the height, H, to which the ball rebounds using the following equation:
$H = 1{,}23(T-K_1)^2$
$1{,}23 = g\,(9{,}82)/8$ ($H = \frac{gt^2}{2}$ $t=\frac{A}{2}$ $H = \frac{g(\frac{A}{2})^2}{2} > \frac{g\frac{A^2}{4}}{2} > \frac{gA^2}{8} = 1{,}23A^2$)

T = time between the first and second bounces.
K_1 = correction factor *(*for measuring the sound when the ball leaves the surface*)*

Repeat the test 10 times and calculate the mean value of the rebound.

5.3.7.4 Results

The results are reported as individual values rounded off to 1cm.

5.3.8 Ball Marking

5.3.8.1 Equipment

Sliding callipers with accuracy specified in section 5.1.2.

5.3.8.2 Samples

Five balls.

5.3.8.3 Implementation

Area calculation of all text, as well as checking the embossed print.

5.3.8.4 Results

The results are reported as approved or failed.

5.4 Goal

5.4.1 Scope and Application

The purpose of the tests listed below is to guarantee the quality of the goal apparatus with respect to dimensions and weight, pad discoloration onto the playing surface, drop net strength and the mesh size of the net.

5.4.2 Goal Dimensions

5.4.2.1 Equipment

Steel rule and radius template with an accuracy as specified in section 5.1.2.

5.4.2.2 Sample

One goal.

5.4.2.3 Implementation

The goal dimensions are measured according to appendix C9. The radii of the goal, which should not meet the playing surface, are checked using the radius template.

a) goal width
b) goal height
c) back bar diameter
d) goal frame diameter
e) lower goal depth
f) goal corner radius (radius of central axis)
g) upper goal depth

5.4.2.4 Results

Individual results are reported with rounding off as specified in section 5.1.2.

5.4.3 Goal weight

5.4.3.1 Equipment

Scale with accuracy ±10 g.

5.4.3.2 Samples

One goal with net.

5.4.3.3 Implementation

The goal is weighed on the scale.

5.4.3.4 Results

Goal weight is reported in kg to one decimal point.

5.4.4 Pad Discoloration onto Playing Surface

5.4.4.1 Equipment

As specified in section 5.2.8.1.

5.4.4.2 Samples

Three pads.

5.4.4.3 Implementation

The pads are mounted furthest out on the pendulum with the underside of the pad facing outwards. The tests are implemented thereafter as per section 5.2.8.3.

5.4.4.4 Results

The occurrence of discoloration on the test plate is reported.

5.4.5 Drop Net Strength

5.4.5.1 Equipment

Weight with mass 10± 0.2 kg. Device for attachment of weight to the net.

5.4.5.2 Samples

One goal with attachable net.

5.4.5.3 Implementation

The drop net is attached to the goal according to manufacturer instructions. The instructions are to include a specification for the top edge of the drop net to be fixed to the goal net. The goal is positioned so that the distance from the bottom edge of the goal to the playing surface allows for the weight to hang freely. The net is to be tested once for both outer edges and once in the middle. The weight is attached to two mesh openings next to each other, one mesh opening in from the outer edge and bottom edge of the net. The weight is hoisted up to a height equivalent to 2/3rds of the goal height. The weight is released and allowed to fall freely. Following each fall, the net and attachment device are inspected to see if they are intact. Three tests are carried out, one at each position.

5.4.5.4 Results

Any damage that has arisen to the net or attachment devices is reported.

5.4.6 Net Mesh Size

5.4.6.1 Equipment

Steel rule.

5.4.6.2 Samples

One attachment net for one goal.

5.4.6.3 Implementation

Measurement of the net is carried out according to BS 1892:Part 2: Section 2.11.

5.4.6.4 Results

The mesh size is to be reported.

5.4.7 Drop Net Length

5.4.7.1 Equipment

Steel rule.

5.4.7.2 Samples

One attachment net for one goal.

5.4.7.3 Implementation

Measurement of the drop net is carried out.

5.4.7.4 Results

The distance between the bottom edge of the net and the playing surface is reported.

5.5 Rinks

5.5.1 Scope and Application

The purpose of the tests listed below is to guarantee the quality of rinks about dimensions, ball rebound, weight, strength, and durability.

5.5.2 Rink Dimensions

5.5.2.1 Equipment

Steel rule or metal measuring tape with accuracy as specified in section 5.1.2.

5.5.2.2 Samples

Two rink sections.

5.5.2.3 Implementation

Testing takes place using a steel rule with three measuring points for each rink section (appendix C10).

a) rink height. roping needle
b) distance from the playing surface to the bottom edge of the rink (e.g., when using pads etc.).

5.5.2.4 Results

Individual results are reported with rounding off as specified in section 5.1.2.

5.5.3 Rink radii

5.5.3.1 Equipment

Steel rule or metal measuring tape and radius template with an accuracy as specified in section 5.1.2.

5.5.3.2 Samples

Two rink sections.

5.5.3.3 Implementation

The steel rule or metal measuring tape is used for measuring the corner radius. The measurement is made using an upright corner section (appendix C10). The radius mall is used for measuring the top edge and short end. The radii are checked at three measuring points on each section of the rink.

c) rink top edge radius
d) rink edge radius
e) rink corner radius

5.5.3.4 Results

Individual results are reported with rounding off as specified in section 5.1.2.

5.5.4 Rink Section Fitment

5.5.4.1 Equipment

Steel rule with an accuracy as specified in section 5.1.2.

5.5.4.2 Samples

Two rink sections.

5.5.4.3 Implementation

The rink sections are mounted as per the manufacturer's instructions. The measurement is carried out with respect to the parallelism of the joint both vertically and horizontally as well as the width of the joint using three measuring points for each joint (appendix C10).

f) rink joint width
g) rink horizontal parallelism
h) rink vertical parallelism

5.5.4.4 Results

Individual results are reported with respect to greatest level of nonconformity for each dimension f, g and h. Rounding off as specified in section 5.1.2.

5.5.5 Rink Surface Fineness

5.5.5.1 Equipment

Sponge of polyurethane.
(E.g., car sponge without detergent.)

5.5.5.2 Samples

Two rink sections.

5.5.5.3 Implementation

The rinks are examined both visually and with the aid of the sponge. The sponge is applied over the short sides of the rink, the top side, and the surface resting on the playing surface to detect possible rough edges and sharp objects e.g., protruding supports.

5.5.5.4 Results

Type and positioning of any rough edges, sharp objects or other damage is reported.

5.5.6 Impact Test

5.5.6.1 Equipment

Drop hammer with weight 1000 ± 50 g. The head is to be of hardened steel and have a shape of a cone terminated with spherical top with a radius of 7 mm. Stand, where the drop hammer can fall freely from a drop height of 400 ± 5 mm. Equipment for repeated release of the drop hammer. Test holder with minimum dimensions of 200 x 200 mm and thickness 20 ± 1 mm. Sponge.

5.5.6.2 Samples

One rink section.

5.5.6.3 Implementation

The rink is mounted in the test holder so that the surface of the rink, which normally faces the playing area, faces upwards. The drop hammer is released from a height of 400 mm. The test is carried out in five different places on the rink. The appearance of the points of impact, where the drop hammer has hit the rink, is noted. The rink is examined both visually and with the aid of the sponge. The sponge is applied over the points of impact to detect possible rough edges and sharp objects e.g., protruding supports.

5.5.6.4 Results

The appearance of the points of impact, and the occurrence of protruding objects following the test are reported.

5.5.7 Ball Rebound from Rinks

5.5.7.1 Equipment

Test holder of aluminium or steel with dimensions of 200 x 200 mm and thickness of 10 mm. Sliding callipers and a ball.

5.5.7.2 Samples

One rink section.

5.5.7.3 Implementation

To begin with, a series of tests are carried out in line with point 5.3.7.3 to be used as reference values. The rebound test from the rinks is carried out in line with point 5.3.7.3, but with a piece cut out of the rink section and mounted in the test holder acting as a rebound surface. The dimensions of the cut piece are to be the same as the test holder. The test piece is mounted so that the ball rebounds against the side facing the playing area. Five rebound tests are carried out.

5.5.7.4 Results

The results are reported in relation to the rebound against the steel plate according to point 5.3.7.3 as an average value in per cent rounded off to 1 %.

5.5.8 Rink Weight per running meter

5.5.8.1 Equipment

Scale with accuracy ±10 g.

5.5.8.2 Samples

Two rink sections.

5.5.8.3 Implementation

The rink sections are weighed on the scale. The length of each rink section is measured and the weight per running meter is calculated as a mean value of the two rink sections.

5.4.3.4 Results

Rink weight per running meter is reported in kg to one decimal point.

6 Report

Each test report is to include the following information as a minimum requirement.

6.1 Name and Address

Name and address of the testing laboratory and information on testing site, if different to that of the specified address.

6.2 Identification

Unambiguous identification of the test report and of each page as well as information on the total number of pages in the report.

6.3 Client

Client's name and address.

6.4 Test Items

Description and identification of test items.

6.5 Date

The arrival date of the test item and time of test implementation along with the issue date of the report.

6.6 Method

Description and identification of method or routine.

6.7 Sampling

Description of sample procedure in appropriate cases.

6.8 Nonconformity, Additions or Exceptions

Information relating to each instance of nonconformity, addition, or exception from the testing method.

6.9 Results

Information on measurement procedures and attained results, in appropriate cases backed up by charts, diagrams, etc. along with information on observed defects.

6.10 Signature

Signature with title, or other equivalent confirmation, of personnel responsible for the tests.

6.11 Report

A statement stating that reproduction of the report can only be made in its entirety, unless otherwise permitted in writing from the testing laboratory.

Provisions for acceptance of other testing, certification, and inspection bodies.

The International Floorball Federation - IFF - has stated that, if other test organisations wish to be approved for initial type testing in connection with certification, they shall be inspected and approved by RISE, the Research Institute of Sweden. Such inspection by RISE Certification will be in accordance with EN-ISO/IEC 17025 and by means of comparison testing intended to ensure the consistency of test and inspection results.

If the test organisation is already accredited to EN-ISO/IEC 17025 by an accreditation body that is recognised by the European Accreditation organisation (EA), then only comparison testing intended to investigate consistency of test results will need to be performed.

Application for acceptance shall be forwarded to RISE Certification who will set up a programme for the evaluation. A contract shall be signed by the testing body and RISE Certification.

Application form for testing

The undersigned hereby order testing of floorball equipment.

Company: _____

VAT no.: _____

Postal address: _____

Visit address: _____

Postal no. and town: _____

Telephone no.: _____ Telefax no.: _____

E-mail: _____ Homepage: _____

Contact person: _____

Product

Stick: numbers of models: _____ *Specify model no:/name and another info*
Ball: numbers of models: _____ *for the products the other side of this form*
Goal: numbers of models: _____
Rink: numbers of models: _____ Numbers of rink segment ____ per rink

Annual production

Sticks: total quantity: _____ pcs
Balls: total quantity: _____ pcs
Goals: total quantity: _____ pcs
Rinks: total quantity: _____ pcs

For testing: _____the _____
City and date

_____
Sign

_____
Clarification of signature

Type of equipment (stick, ball etc)	**Model name** (e.g., Super Pro)	**Drawing number** (e.g., SPX-1110)	**Remarks** (e.g., SPX-1110 and 1120 has the same shaft construction but different blades)
Other information			

Application form for certification

The undersigned hereby order certification of Floorball equipment.

Company: _____

VAT no.: _____

Postal address: _____

Visit address: _____

Postal no. and town: _____

Telephone no.: _____ Telefax no.: _____

E-mail: _____ Homepage: _____

Contact person: _____

Product

On the reverse of this form, state the model's number/name and other information for the product.

Test report

We attach test report no: _____

Testing is being performed by: _____

Supplier´s In-House Inspection

We attach a brief description of our quality system: _____

Marking proposal

We attach a description of how certification labelling is applied: _____

Signature For certification:

_____the _____
City and date

_____
Sign

_____

Clarification of signature

Type of equipment (stick, ball etc.)	**Model name** (e.g., Super Pro)	**Drawing number** (e.g., SPX-1110)	**Remarks** (e.g., SPX-1110 and 1120 has the same shaft construction but different blades)

The products will be sold in:

Country	**Region**

Country	**Region**

Order form for certification marks

The undersigned hereby orders certification symbol labels as specified below

Company: _____

Contact person: _____

Order of certification marks.

Product	**Size**	**Quantity**	**Unit price**	**Total price** (exclusive freight costs)
Ball			0:03 CHF	
Stick	45 x 19 mm		0:28 CHF (self-print) 0:42 CHF (buying sticker)	
Goal	90 x 38 mm		6:00 CHF (official match size) 3.00 CHF (smaller sizes)	
Rink	90 x 38 mm		110 CHF	

Order of certification marks: _____the _____
City and date

_____
Sign

_____
Clarification of signature

Design of test report

XX AB
Att. Nnnn Mmm
Box xxx
100 00 Xxxxxx

Handläggare, enhet/*Handled by, department*	Datum/*Date*	Beteckning/*Reference*	Sida/*Page*
Lars-Åke Henriksson, Mat. Technology, lay	20xx-xx-xx	Fxxxxxx	1 (3)
Tel +46 (0) 33 16 53 21			

6 Testing of floorball equipment in accordance with SP-METHOD 1506

Items

1. 10 Floorball balls with the model's name: Nnnnnn.
2. 6 Floorball sticks with the model's name: Nnnnnn.
3. 1 Floorball goal with the model's name: Nnnnnn.
4. 1 Floorball rink with the model's name: Nnnnnn.

Test items 1 - 4 were made available to the RISE Research Institute of Sweden xx nnnnn 20xx.

Assignment

Testing of Floorball stick in accordance with SP-METHOD 1506, point 5.2.
Requirement criteria as per SPCR 011, point 2.1.

Testing of Floorball ball in accordance with SP-METHOD 1506, point 5.3.
Requirement criteria as per SPCR 011, point 2.2.

Testing of Floorball goal in accordance with SP-METHOD 1506, point 5.4.
Requirement criteria as per SPCR 011, point 2.3.

Testing of Floorball rink in accordance with SP-METHOD 1506, point 5.5.
Requirement criteria as per SPCR 011, point 2.4.

Testing Equipment

- Scale, Mettler
- Sliding callipers, Mitutoyo
- Steel rule
- Radius template
- Universal testing machine, Instron
- Universal testing machine, Frank
- Rebound testing equipment in accordance with SP-METHOD 1506
- Impact testing equipment in accordance with SP-METHOD 1506
- Friction testing equipment in accordance with SP-METHOD 1506
- Testing equipment for discoloration test in accordance with SP-METHOD 1506
- Stick blade measurement device in accordance with SP-METHOD 1506
- Impact testing equipment in accordance with prEN 967
- Contact (stylus) instrument

Test Implementation

All sticks and samples taken from sticks were stored and tested at
23 ± 2 °C and 50 ± 5 % RH.
The tests were carried out in accordance with SP-METHOD 1506, point 5.2 and assessed in accordance with the requirement criteria in SPCR 011, point 2.1.

All the ball and samples taken from balls were stored and tested at
23 ± 2 °C and 50 ± 5 % RH.
The tests were carried out in accordance with SP-METHOD 1506, point 5.3 and assessed in accordance with the requirement criteria in SPCR 011, point 2.2.

The goal was stored and tested at 23 ± 2 °C and 50 ± 5 % RH.
The tests were carried out in accordance with SP-METHOD 1506, point 5.4 and assessed in accordance with the requirement criteria in SPCR 011, point 2.3.

All rink sections and samples taken from sideboard sections were stored and tested at 23 ± 2 °C and 50 ± 5 % RH.
The tests were carried out in accordance with SP-METHOD 1506, point 5.5 and assessed in accordance with the requirement criteria in SPCR 011, point 2.4.

The test was carried out xx - xx nnnnnn 20xx.

Results

Tested sticks with the model name “Nnnnnn” met the requirements as per SPCR 011. (See appendix 1 for individual measurement results.)

Tested balls with the model name “Nnnnnn” met all requirements except point 3.2.3 "surface fineness", as per SPCR 011 (See appendix 2 for individual measurement results.)

Tested goal with the model name “Nnnnnn” met the requirements, as per SPCR 011. (See appendix 3 for individual measurement results.)

Tested rink sections with the model name “Nnnnnn” met the requirements as per SPCR 011. (See appendix 4 for individual measurement results.)

X - Institute

Nnnn Mmmm
Manager

Nnnn Mmmm
Technical Manager/Officer

Appendices
Measuring results

Appendix 1 to the report

Nnnnnn		Stick 1	Stick 2	Stick 3
Design [sharp objects, rough edges]		No remark	No remark	No remark
Weight [grams]		xxx *	xxx *	xxx *
Dimensions	(a) [1]	xxx	xxx	xxx
[mm]	(b) [2]		xxx	xxx xxx
	(c) [3]		xxx	xxx xxx
	(d) [4]		xxx	xxx xxx
	(e) [5]		xxx	xxx xxx
	(h) [6]		xxx	xxx xxx
	(i) [7]		xxx	xxx xxx
	(j) [8]		xxx	xxx xxx
	(k) [9]		xxx	xxx xxx
	(l) [10]		xxx	xxx xxx
	(m) [11]		xxx	xxx xxx
Rigidity** [mm] [12]		28,2 *(mean value of six deflection three in each direction)* 26,5 *(lowest individual value)*		
[N] [13]		602	584	586
[mm] [14]		1,1	0,6	0,6
[N] [15]		652	645	663
[mm] [16]		0,4	0,7	0,4
Impact strength	700 mm	No remark	No remark	No remark
[cracks]	40 mm	No remark	No remark	No remark
	blade ***	No remark	No remark	No remark
Blade radii	(f)[17]	No remark	No remark	No remark
	(g)[18]	No remark	No remark	No remark
Blade Discoloration		No remark	No remark	No remark
Blade Torsion Strength ***		No remark	No remark	No remark
Stick markings		Fulfils (New length system and contact information)		
Blade markings		Fulfils (Brand and IFF)		

* Grip included
** Rigidity test performed without taking binding grip off.
*** Blade without other plastic materials/laminates.

1 Stick length
2 Shaft's curve radius
3 Shaft's max diameter
4 Length to grip line
5 Width of grip line
6 Blade length
7 Blade thickness
8 Blade height
9 Blade penetration depth
10 Blade concavity depth
11 Shaft straightness
12 Deflection at 300 N
13 Force at 60 mm deflection, vertical direction
14 Remaining deformation, vertical
15 Force at 60 mm deflection, horizontal direction
16 Remaining deformation, horizontal direction
17 Blade radius
18 Blade edge radius

Design of agreement

Agreement concerning material regulations SPCR 011

The following agreement has this day been reached between Research Institute of Sweden (RISE) and Company X (organisation number xxxxxx xxxx).

1. Purpose

To ensure that type tested and approved equipment for Floorball are manufactured according to SPCR 011, and that the manufacturer will comply with SPCR 011 in all aspects.

2. Extent

RISE will perform market surveillance in accordance with SPCR 011.

RISE will submit a written report on each supervisory inspection that it performs. If results do not comply with the required standards, measures shall be taken by Company X in accordance with SPCR 011. Company X shall keep RISE informed of the countries in which he sells his certified Floorball equipment. Company X shall, when applicable according to SPCR 011 or other information, send accounting reports concerning stick production.

3. Costs and other terms and conditions

The costs of inspection in accordance with this agreement and of associated testing shall be met by IFF and if testing gives a negative result the renewed testing shall be met by Company X. This agreement is subject to the terms and conditions as set out in SPCR 011 and RISE 's General Conditions.

Company X accepts to pay fines according to SPCR 011 section 4.6 if not complying with the rules.

4. Validity of this agreement

This agreement comes into force when it has been signed by both parties. Notice of termination shall be given in writing and may be given by either party. The agreement shall then cease to apply three months after notice of termination. If Company X fails to comply with the terms of this agreement, and if such non-compliance is not negligible, RISE shall be entitled to terminate the agreement with immediate effect.

Two copies of this Agreement have been prepared and signed, with one copy being retained by RISE and one by Company X.

Place and date	Place and date
Borås, __ __ 2018	_____, __ __ 20182020
RISE Research Institute of Sweden Chemistry and Materials Technology	**Company X**
Nnnnnnn Nnnnnnnnnn	Nnnnnnn Nnnnnnnnnn

CERTIFICATE

XX XX XX

Holder/Issued to

Company name:	Company
Address:	Street
Postal address:	SE-123 45 City
Country:	Sweden
Telephone:	+46-00-000 00 00
Mobile:	+46-000-000 000
E-mail:	nnnnn.nnnnnn@xxxxxxx.com

Product name

For actual brand and model names see the website Certified Floorball Equipment Database.

Product description

Floorball stick shaft is made of carbon fibre and with a round shape. The stick length is between 950 – 1140 mm, the shaft's flex is XX mm and has a diameter of XX mm according to drawing No. Xxxxxxxxx, dated: yyyy-mm-dd. Approved blades according to table in certificate No. XX XX XX.

Attribute

Complies with the regulations of International Floorball Federation (IFF) for league play

Performance requirements

RISE's Certification Rules for Floorball Equipment, SPCR 011 edition 2018.

Marking

Every product covered by this certificate may show the symbol of IFF (reproduced at the bottom right) and the text "SPCR 011". The marking shall also include the name of the manufacturer or his logotype or the product name. The marking shall be placed as specified in SPCR 011.

Validity

This certificate is valid until not later than yyyy-mm-dd.

Miscellaneous

The certificate was originally issued on yyyy-mm-dd.
RISE internal no. xxxxxxx.

NN NN

Certificate No. XX XX XX | issue 1 | YYYY-MM-DD

RISE Research Institutes of Sweden AB | Certification
Box 857, SE-501 15 Borås, Sweden
Phone: +46 10 -516 50 00
certifiering@ri.se www.ri.se

Certified Equipment
SPCR 011
No: 0000001

Guidelines for the measurement of grille openings in a match situation.

- An IFF-marked grille (embossed IFF-marking on a metal plate on the left side of the grille) should be considered as an approved grille and need not necessarily be measured; unless there are indications that the grille has been changed/mended in some way.
- An unmarked grille must always be measured to prove that the grille openings are within the set requirements.
- During the certification approval test a measuring gauge with a dimension of 70 x 8mm is used. The measuring gauge should not be able to be inserted in any of the face protector's grille openings so…

Measurement of grille openings in a match situation, by means of e.g., measuring tape, should be viewed as a rough method to measure the openings in the grille.

- The grille openings must in most cases never be measured to more than 70mm in any direction. In some grilles all grille openings are not rectangular, but have other shapes (e.g., sharply tapered, or curved forms).

If you measure these types of grille openings to a value exceeding 70mm; then it is also important to measure the opening perpendicular (the height) to the other direction.

- If the height is measured to a value below 8 mm e.g., due to nearby parallel grille threads, the length of the part that has a height less than 8mm is to be measured.

The newly measured part length shall be deducted from the previously measured grille opening value that was exceeding 70mm.

- If the result value still is found to exceed 70mm; the grille is not fulfilling the requirement. Otherwise, if the result value is below 70mm: the grille is fulfilling the requirement.

See examples below.

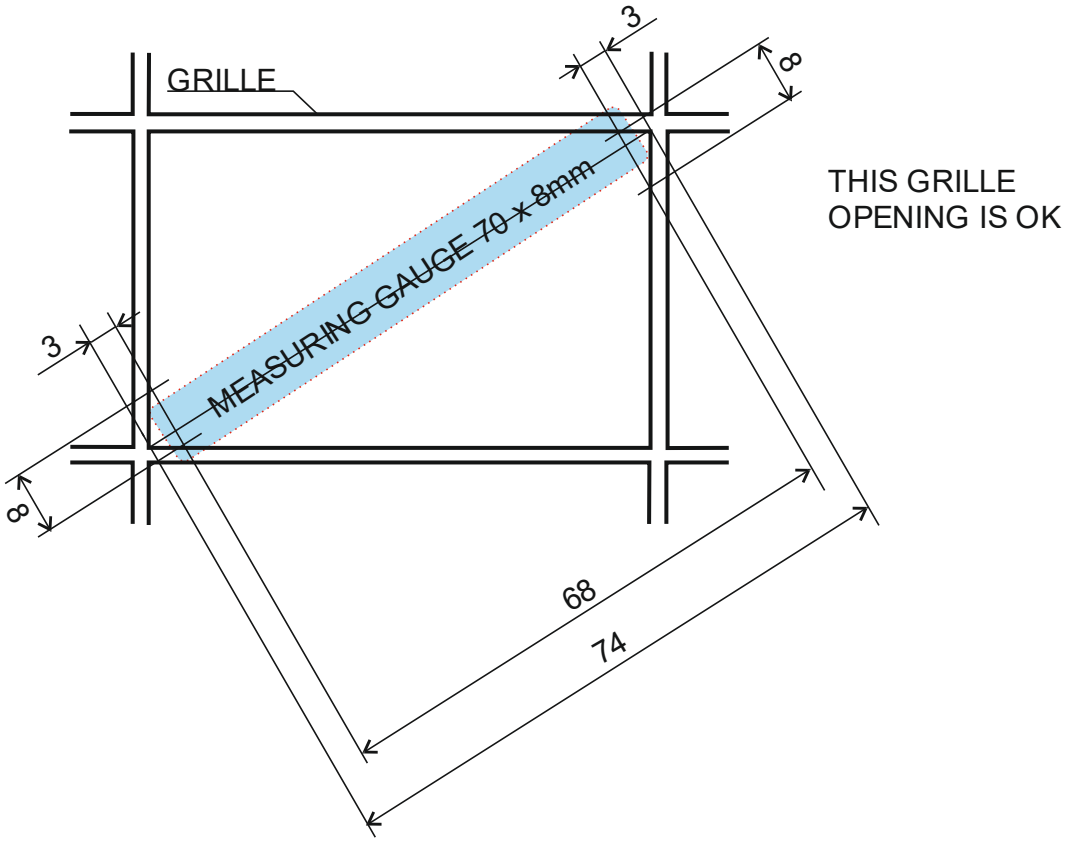

IN THIS EXAMPLE ONE OF THE GRILLE OPENINGS IS MEASURED TO 74mm (DIAGONAL).
BUT THE PERPENDICULAR VALUE (THE HEIGHT) IS LESS THAN 8mm FOR 2 x 3mm OF THE DISTANCE.
A MEASURING GAUGE WITH A DIMENSION OF 70 X 8mm CAN NOT BE INSERTED.

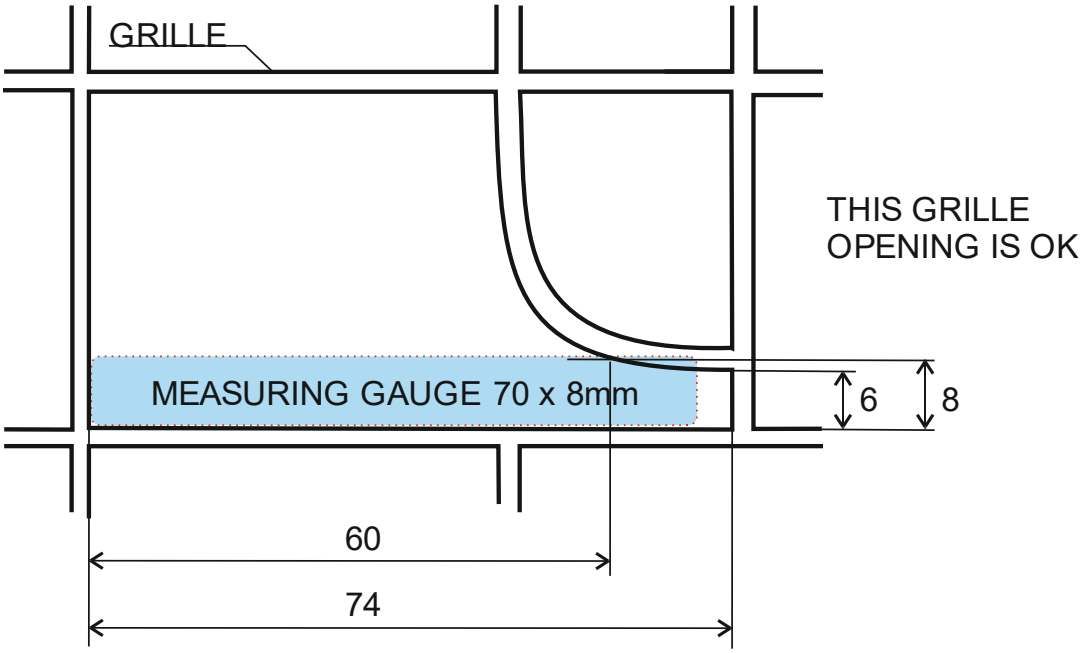

IN THIS EXAMPLE ONE OF THE GRILLE OPENINGS IS MEASURED TO 74mm.
BUT THE PERPENDICULAR VALUE (THE HEIGHT) IS LESS THAN 8mm FOR 14mm OF THE DISTANCE.
A MEASURING GAUGE WITH A DIMENSION OF 70 X 8mm CAN NOT BE INSERTED.

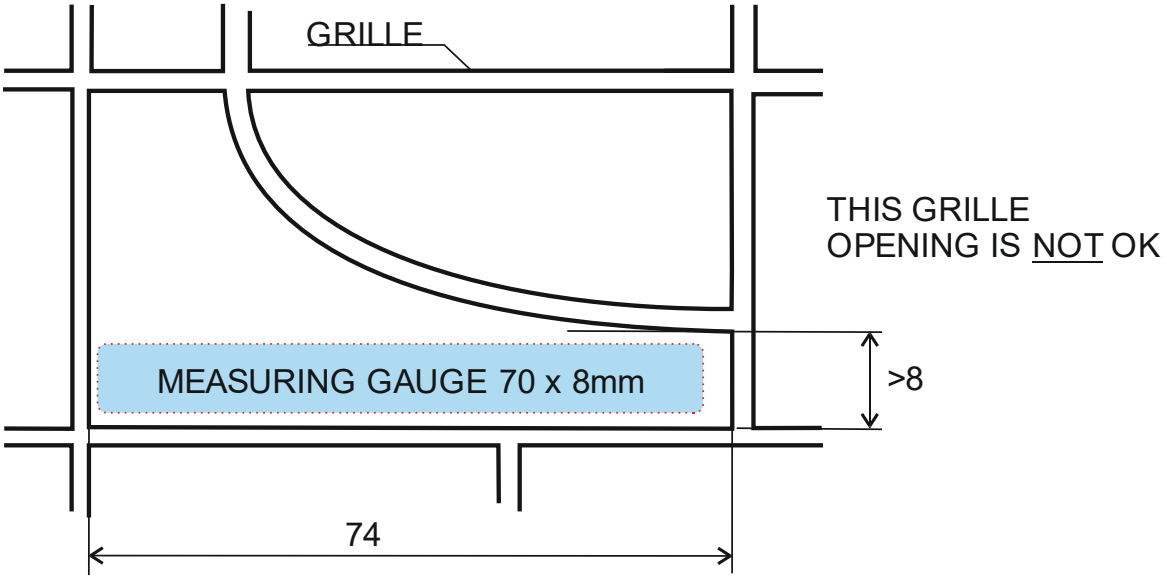

IN THIS EXAMPLE ONE OF THE GRILLE OPENINGS IS MEASURED TO 74mm.
THE PERPENDICULAR VALUE (THE HEIGHT) IS MEASURED TO A VALUE EXCEEDING 8mm.
A MEASURING GAUGE WITH A DIMENSION OF 70 X 8mm CAN EASILY BE INSERTED.

Description	Dimension requirements for floorball stick	Appendix B1

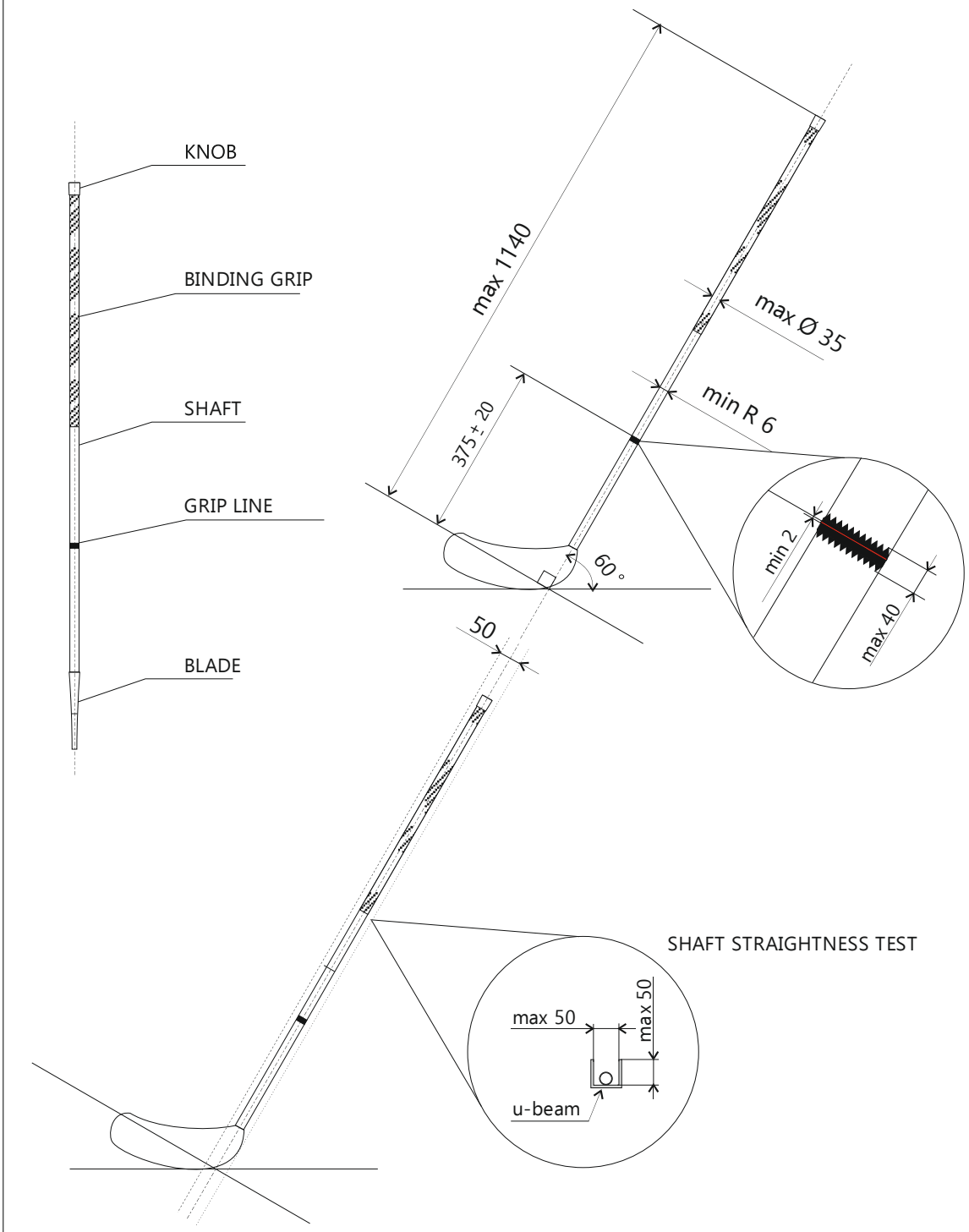

Drawn by	Inspected by	Approved by	Remarks	Replaces	Version
L-Å H				090702, ver 7	8

RI. SE	**RISE Research Institute of Sweden** Chemistry and Materials Technology Section for Polymer Technology Box 857 501 15 BORÅS, Sweden	Title **Floorball stick**	Drawn **110919** Drawing no. **SPCR 011-B1e**

Description	Appendix B2
Dimension requirements for floorball stick blade	

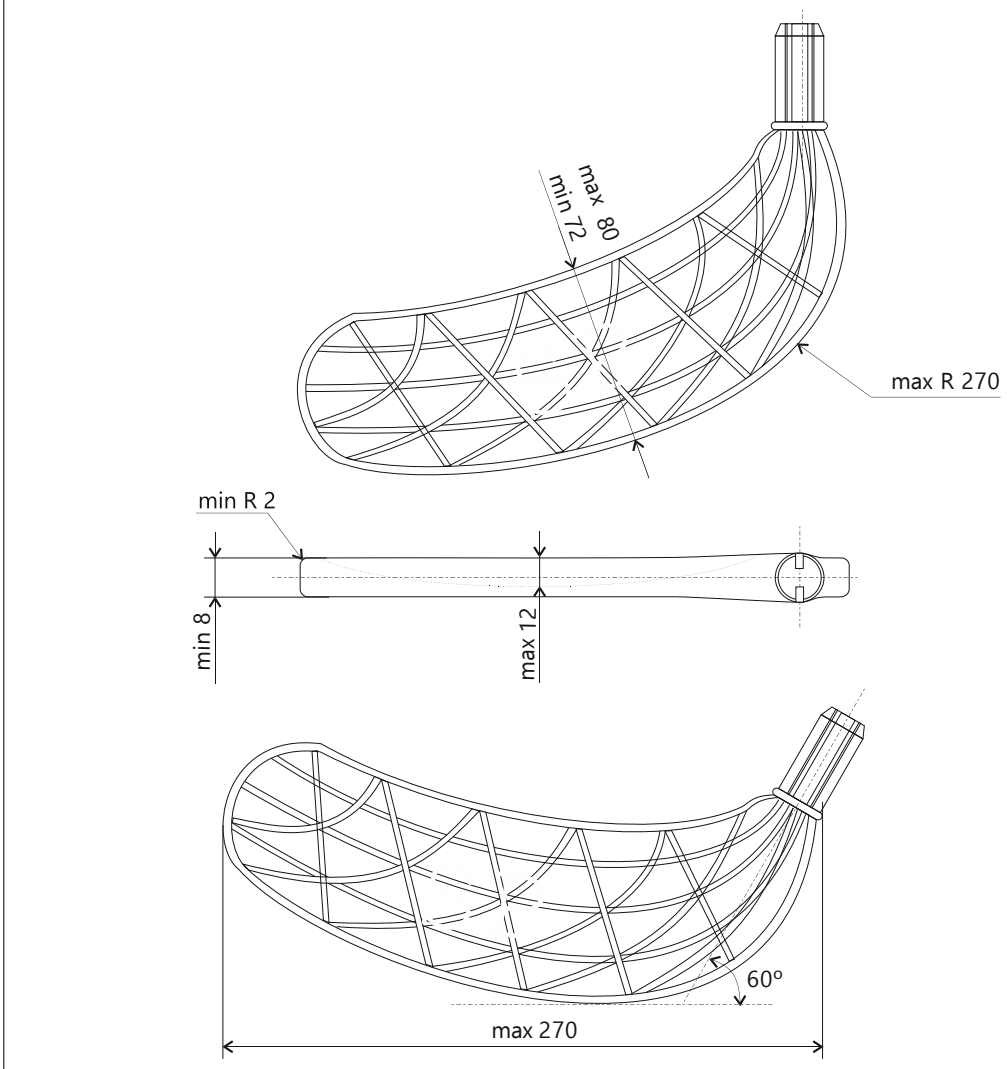

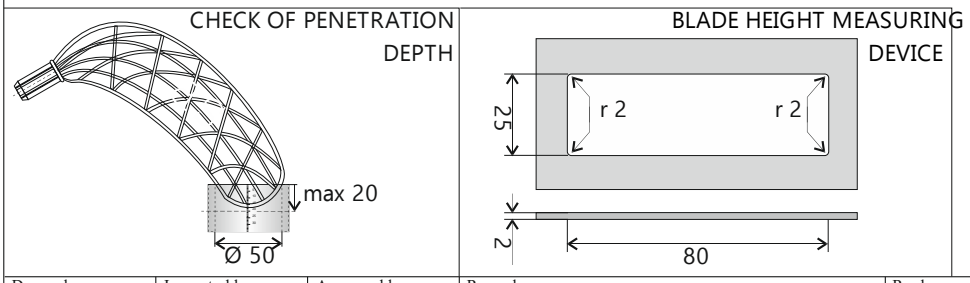

Drawn by	Inspected by	Approved by	Remarks	Replaces	Version
L-Å H				050103, ver 5	6

RI. SE	**RISE Research Institute of Sweden** Chemistry and Materials Technology Section for Polymer Technology Box 857 501 15 BORÅS, Sweden	Title **Stick blade**	Drawn **090903** Drawing no. **SPCR 011-B2e**

Description	**Dimension requirements for floorball ball**	**Appendix B3**

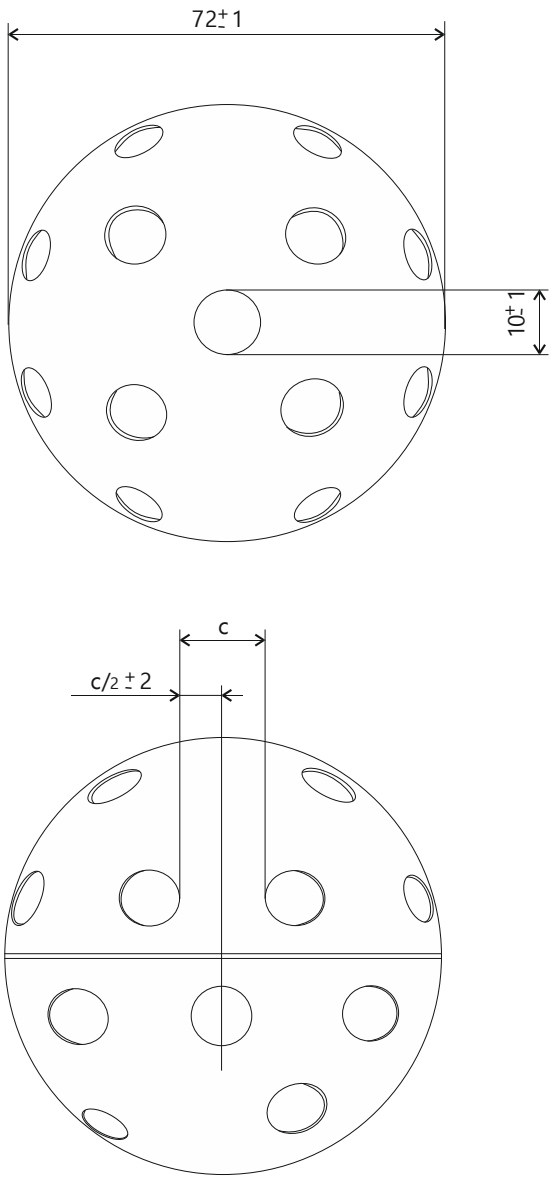

Drawn by	Inspected by	Approved by	Remarks	Replaces	Version
L-Å H				930924, ver 2	**3**

RISE Research Institute of Sweden Chemistry and Materials Technology Section for Polymer Technology Box 857 501 15 BORÅS, Sweden	Title **Floorball ball**	Drawn **951115**	
		Drawing no. **SPCR 011-B3e**	

Description	Appendix B4
Dimension requirements for floorball goal	

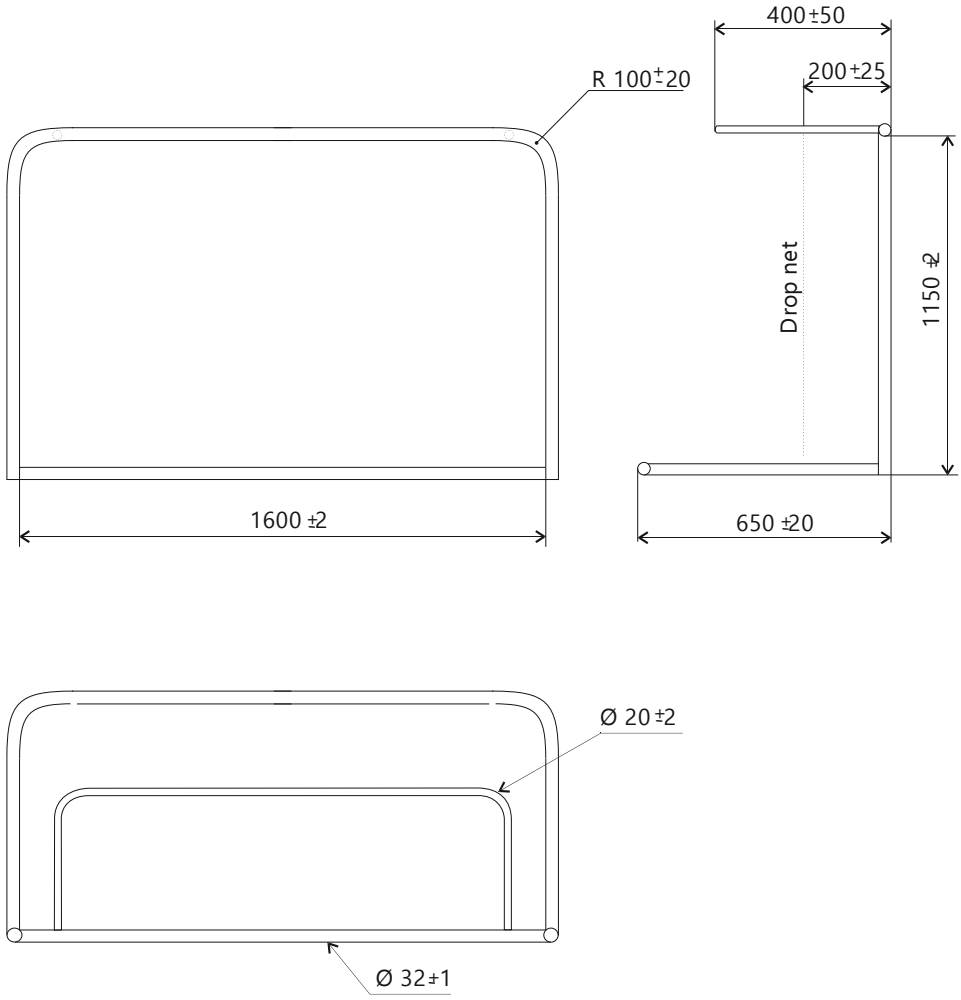

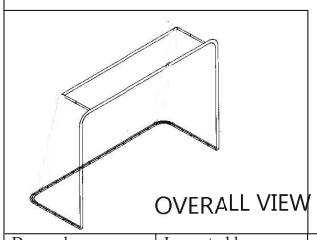

Drawn by	Inspected by	Approved by	Remarks	Replaces	Version
L-Å H				060315, ver 6	7

RISE Research Institute of Sweden Chemistry and Materials Technology Section for Polymer Technology Box 857 501 15 BORÅS, Sweden	Title **Floorball goal**	Drawn **090903**	
		Drawing no. **SPCR 011-B4e**	

Description	Appendix B5
Dimension requirements for floorball rink	

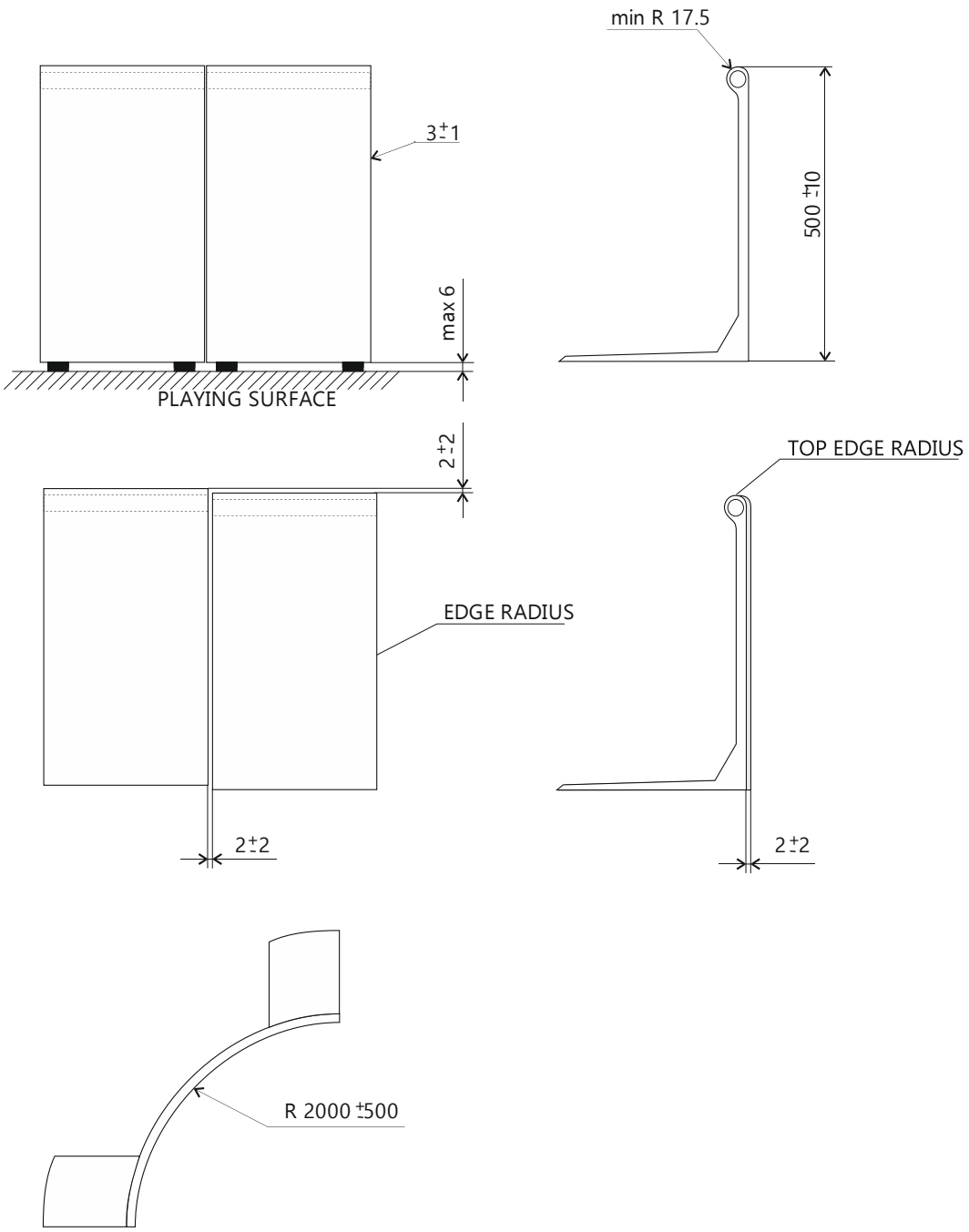

Drawn by	Inspected by	Approved by	Remarks	Replaces	Version
L-Å H				951115, ver 3	4

RISE Research Institute of Sweden Chemistry and Materials Technology Section for Polymer Technology Box 857 501 15 BORÅS, Sweden	Title **Floorball rink**	Drawn **040524**	
		Drawing no. **SPCR 011-B5e**	

Description	Appendix B6
Limeted area of other plastic materials / laminate	

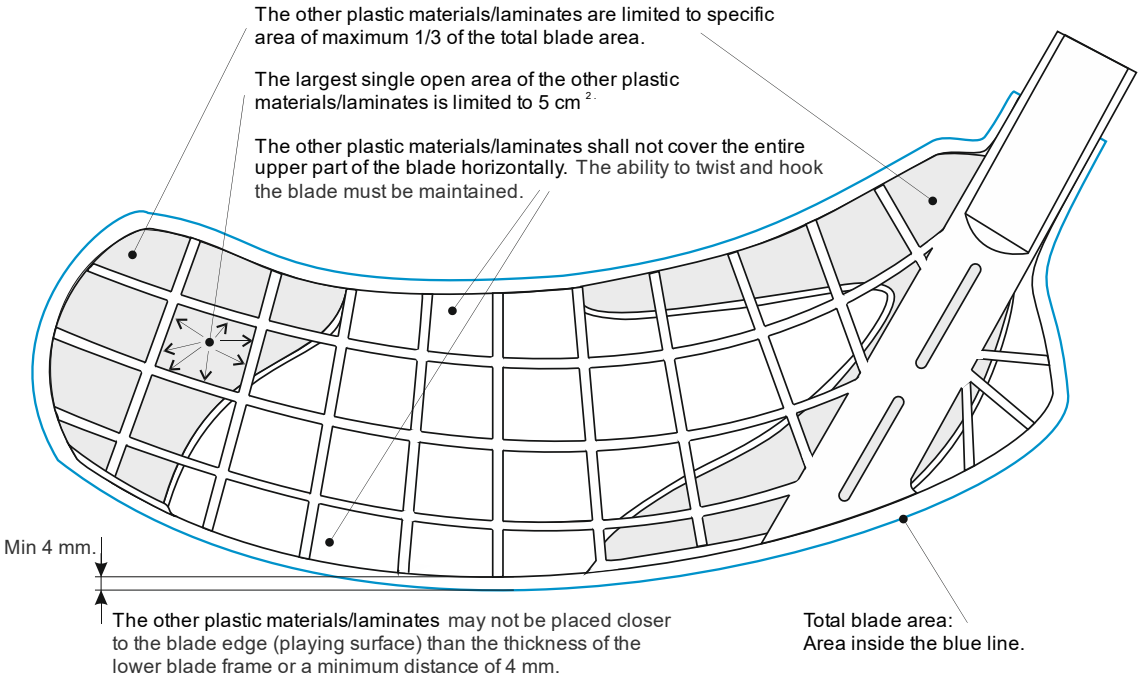

The drawing is just showing an example of possible placement of the other plastic material / laminates.

Drawn by	Inspected by	Approved by	Remarks	Replaces	Version
L-Å H					**1**

RISE Research Institute of Sweden Chemistry and Materials Technology Section for Polymer Technology Box 857 501 15 BORÅS, Sweden	Title **Stick Blade Limeted Area**	Drawn **130523**	
		Drawing no. **SPCR 011-B6e**	

Description	Appendix B7
Drop net length and mounting / positioning requirements for floorball goal	

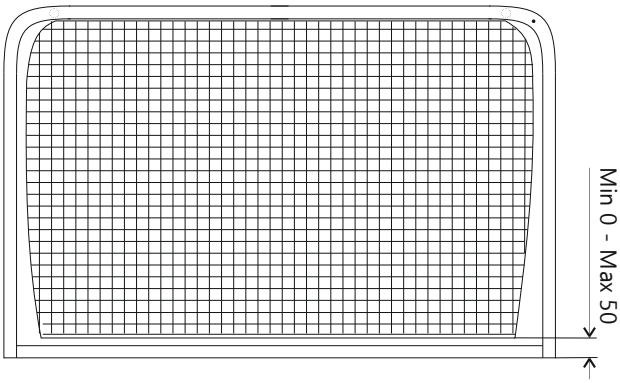

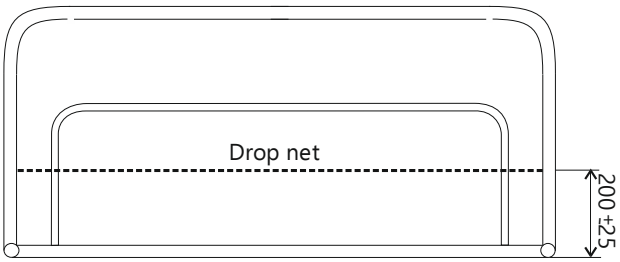

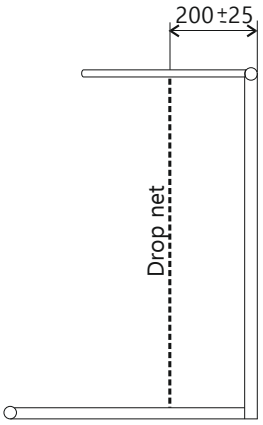

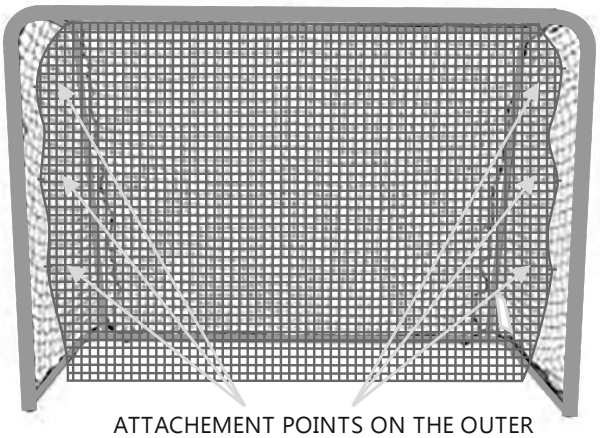

ATTACHEMENT POINTS ON THE OUTER
NET BY USE OF e.g. CABLE TIES

Drawn by	Inspected by	Approved by	Remarks	Replaces	Version
L-Å H					**1**

RI. SE	**RISE Research Institute of Sweden** Chemistry and Materials Technology Section for Polymer Technology Box 857 501 15 BORÅS, Sweden	Title **Floorball goal - Drop net**	Drawn **190521** Drawing no. **SPCR 011-B7e**

Description	Equipment for measuring blade penetration depth and concavity depth	Appendix C1

MEASURING DEVICE FOR BLADE PENETRATION DEPTH

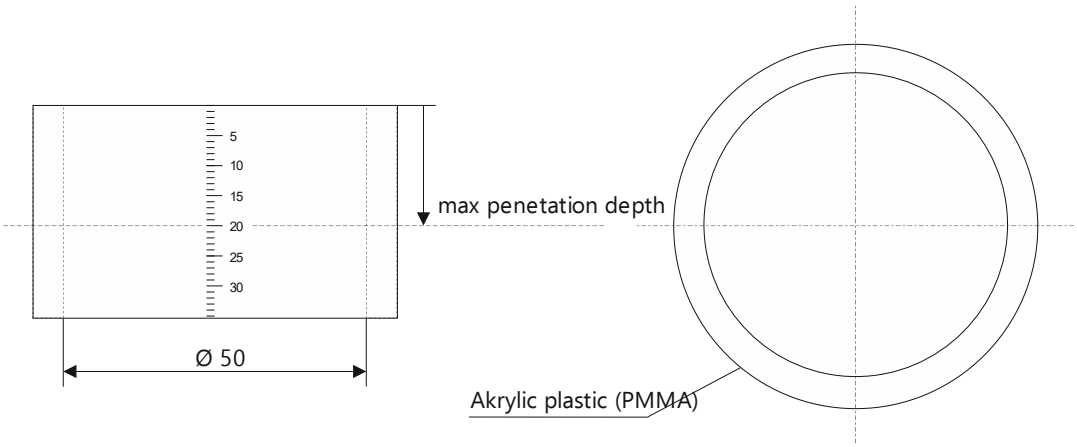

MEASURING DEVICE FOR BLADE CONCAVITY DEPTH

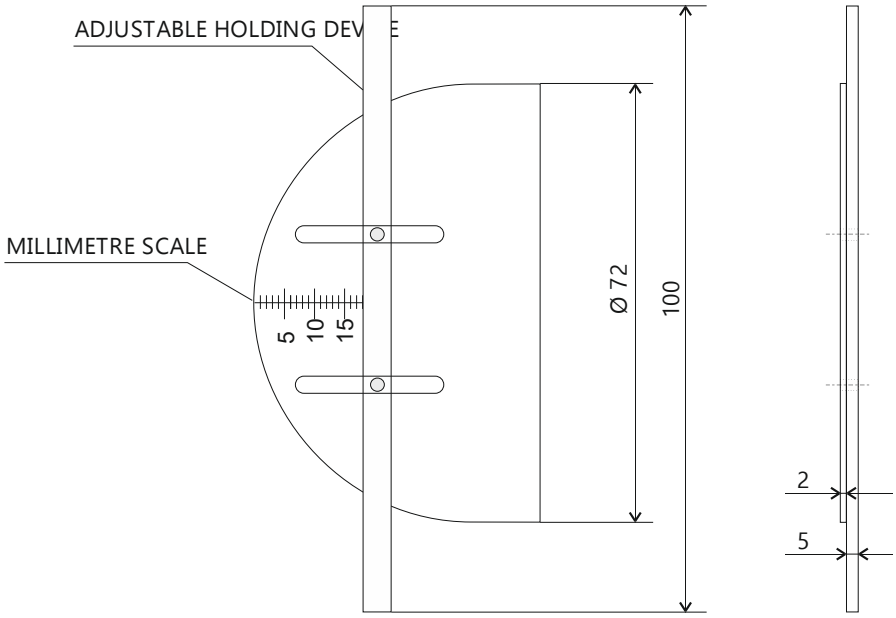

Drawn by	Inspected by	Approved by	Remarks	Replaces	Version
L-Å H				930924, ver 2	3

RISE Research Institute of Sweden Chemistry and Materials Technology Section for Polymer Technology Box 857 501 15 BORÅS, Sweden	Title **Equip. for penetration and concavity depth**	Drawn **951115**	
		Drawing no. **SPM 1506-C1e**	

Description	Appendix C2
Floorball stick dimensions	

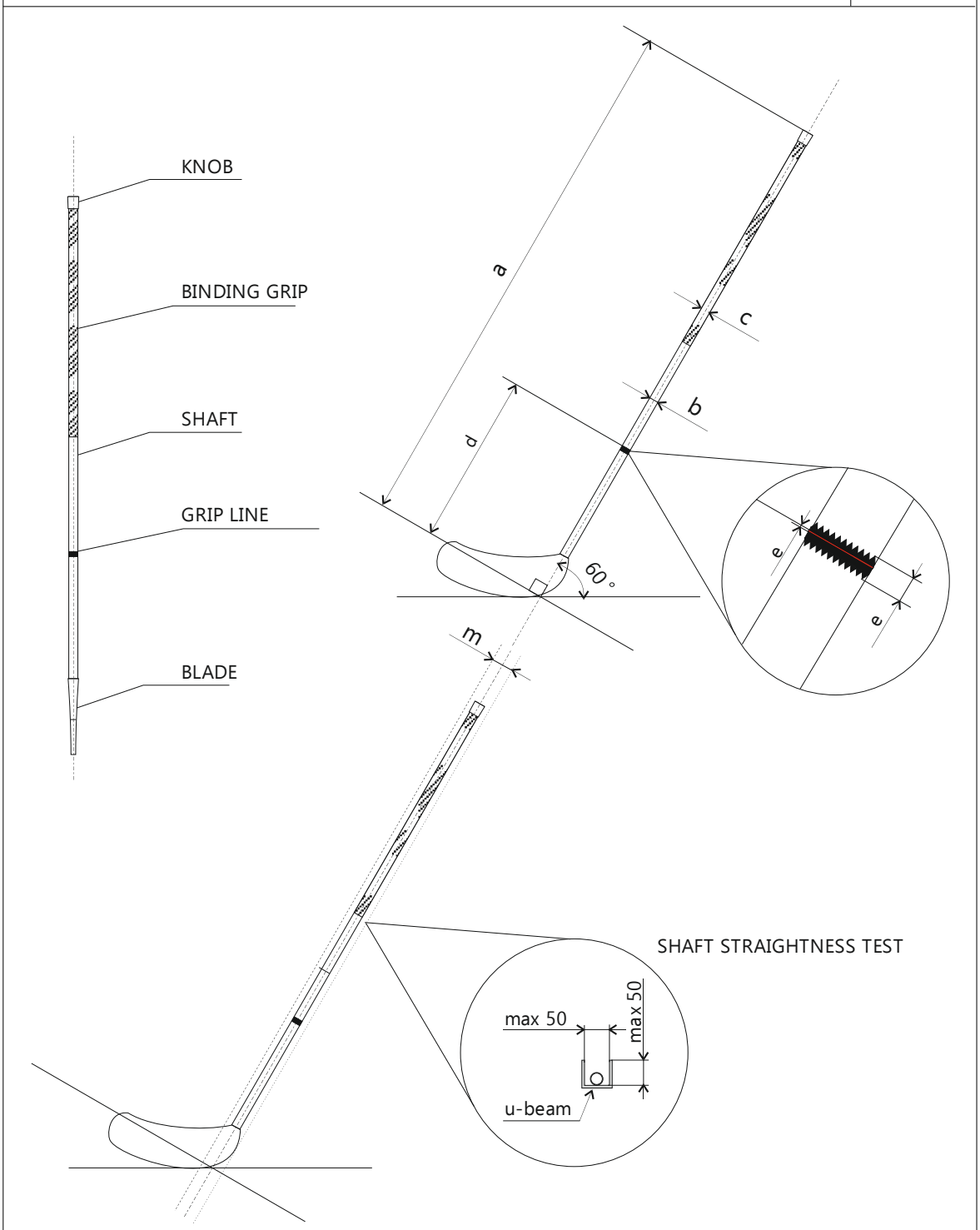

Drawn by	Inspected by	Approved by	Remarks	Replaces	Version
L-Å H				090702, ver 6	7

RISE Research Institute of Sweden Chemistry and Materials Technology Section for Polymer Technology Box 857 501 15 BORÅS, Sweden	Title **Floorball stick**	Drawn **110919**	
		Drawing no. **SPM 1506-C2e**	

Description **Floorball stick blade dimensions**	**Appendix C3**

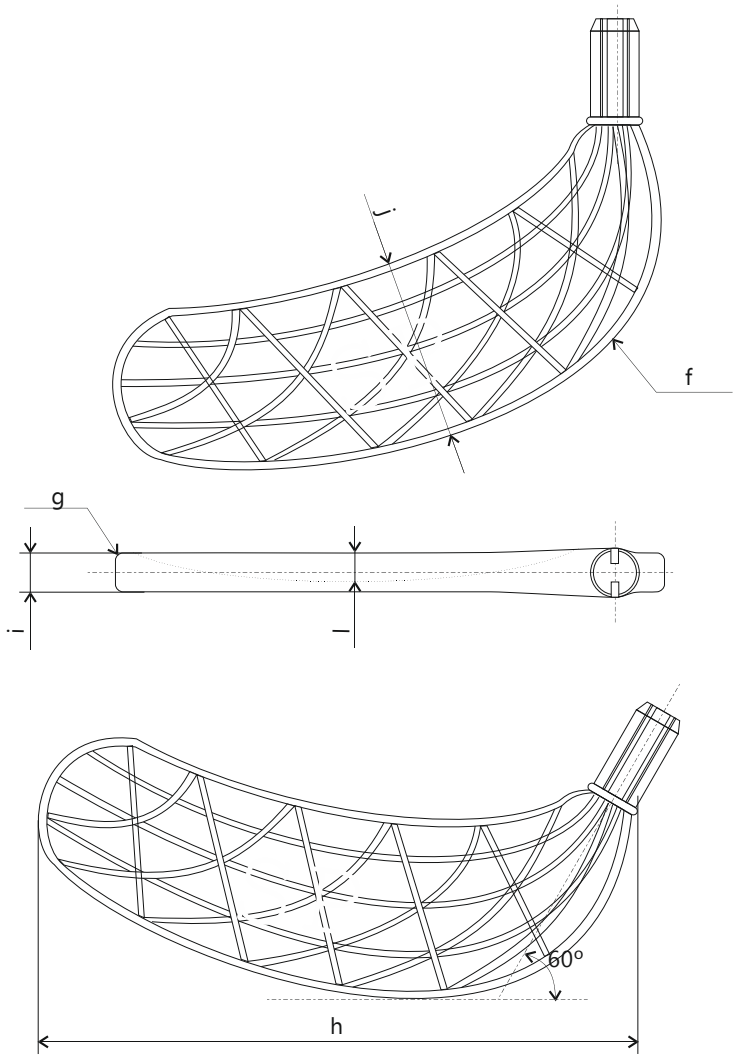

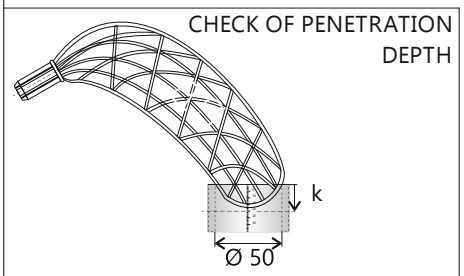

Drawn by	Inspected by	Approved by	Remarks	Replaces	Version
L-Å H				050103, ver 4	**5**

RISE Research Institute of Sweden Chemistry and Materials Technology Section for Polymer Technology Box 857 501 15 BORÅS, Sweden	Title **Floorball stick blade**	Drawn **090702**	
		Drawing no. **SPM 1506-C3e**	

Description	Appendix C4
Equipment for deflection test	

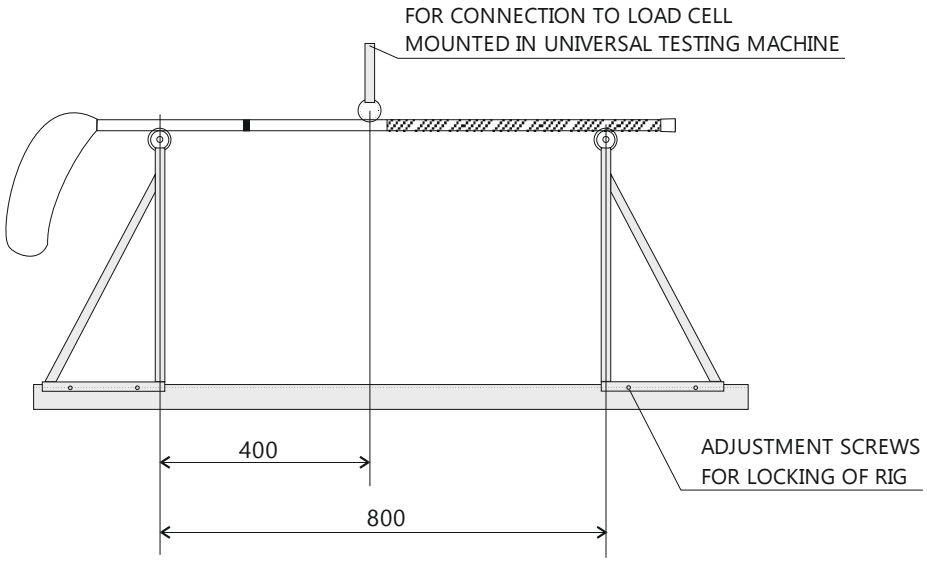

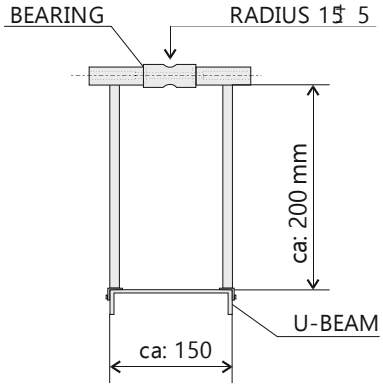

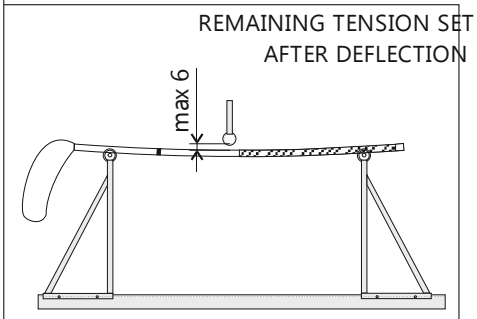

Drawn by	Inspected by	Approved by	Remarks	Replaces	Version
L-Å H				930924, ver 2	**3**

RISE Research Institute of Sweden Chemistry and Materials Technology Section for Polymer Technology Box 857 501 15 BORÅS, Sweden	Title **Deflection**	Drawn **951115**	
		Drawing no. **SPM 1506-C4e**	

Description	Appendix C5
Equipment for impact test	

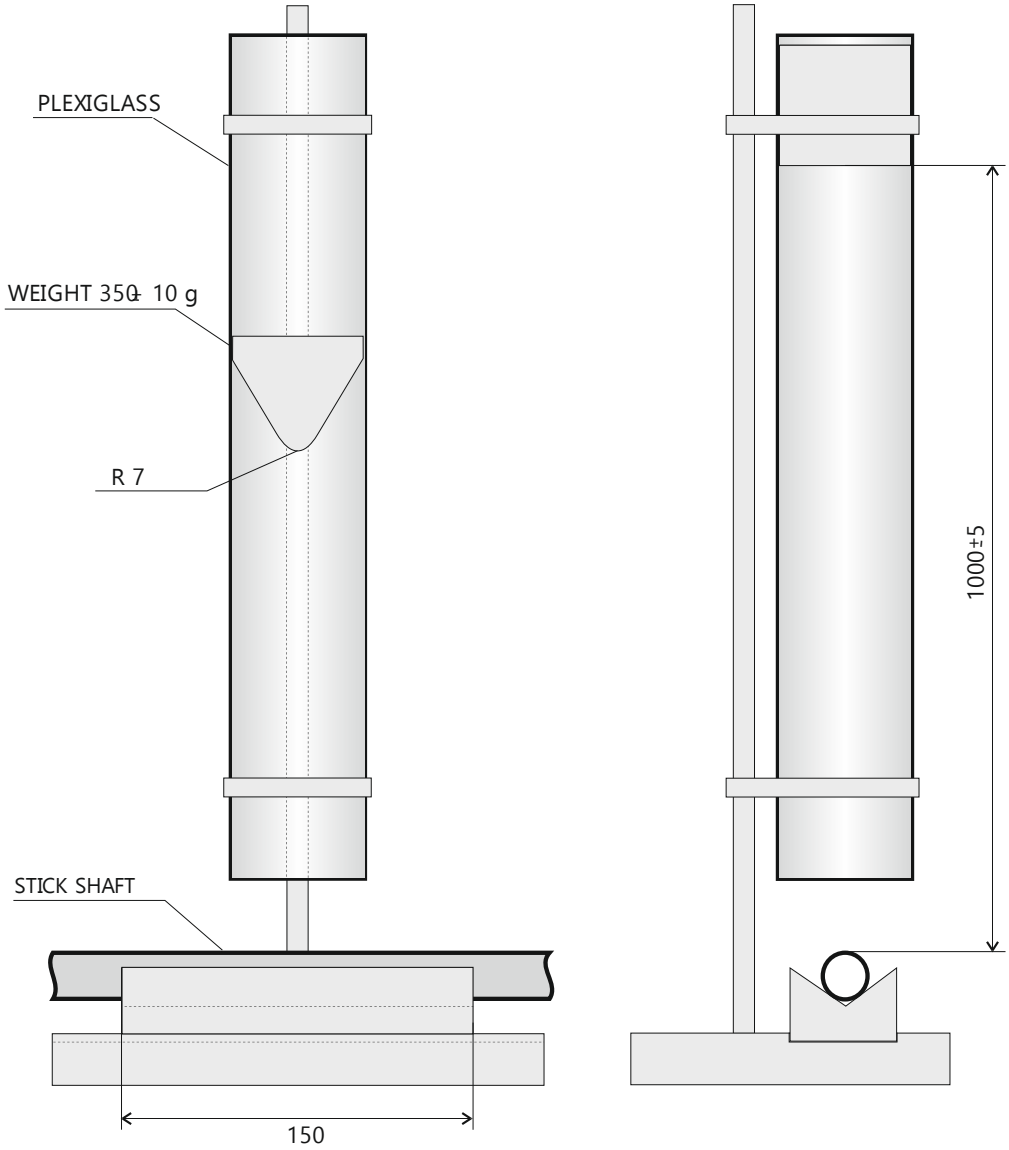

Drawn by	Inspected by	Approved by	Remarks	Replaces	Version
L-Å H				930924, ver 2	**3**

RISE Research Institute of Sweden Chemistry and Materials Technology Section for Polymer Technology Box 857 501 15 BORÅS, Sweden	Title **Impact test**	Drawn **951115**	
		Drawing no. **SPM 1506-C5e**	

Description	Appendix C6
Equipment for discoloration test	

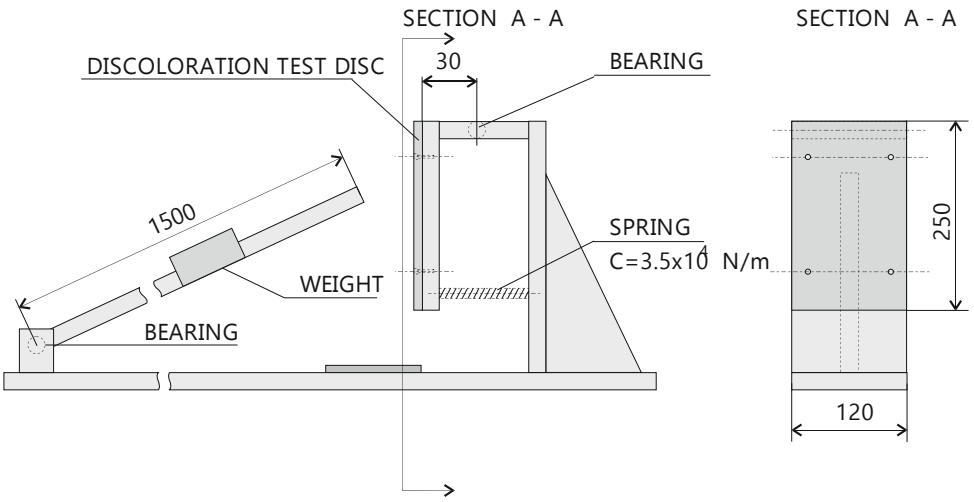

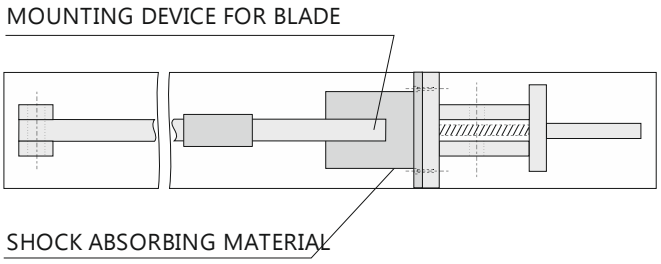

Drawn by	Inspected by	Approved by	Remarks	Replaces	Version
L-Å H				930924, ver 2	**3**

RISE Research Institute of Sweden Chemistry and Materials Technology Section for Polymer Technology Box 857 501 15 BORÅS, Sweden	Title **Discoloration**	Drawn **951115**	
		Drawing no. **SPM 1506-C6e**	

Description **Floorball ball dimensions**	**Appendix C7**

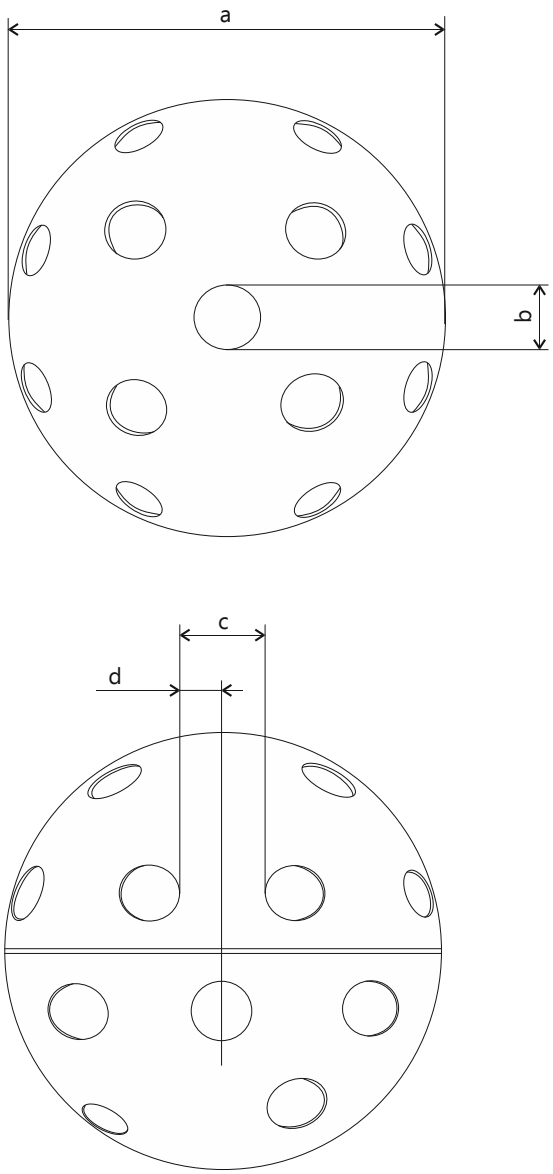

Drawn by	Inspected by	Approved by	Remarks	Replaces	Version
L-Å H				930924, ver 2	**3**

RISE Research Institute of Sweden Chemistry and Materials Technology Section for Polymer Technology Box 857 501 15 BORÅS, Sweden	Title **Floorball ball**	Drawn **951115**	
		Drawing no. **SPM 1506-C7e**	

Description	Equipment for ball rebound test	Appendix C8

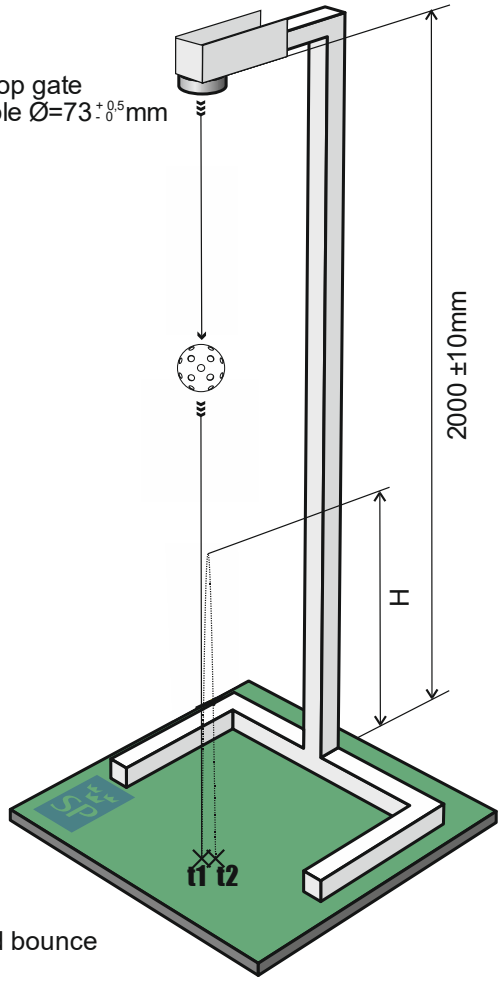

$H=1{,}23(T-K_1)^2$
1,23=g/8
T=t2-t1, time between first and second bounce
K_1= correction factor

Drawn by	Inspected by	Approved by	Remarks	Replaces	Version
L-Å H				951115, ver 3	4

RISE Research Institute of Sweden Chemistry and Materials Technology Section for Polymer Technology Box 857 501 15 BORÅS, Sweden	Title **Ball rebound**	Drawn **140424**	
		Drawing no. **SPM 1506-C8e**	

Description **Floorball goal dimensions**	**Appendix C9**

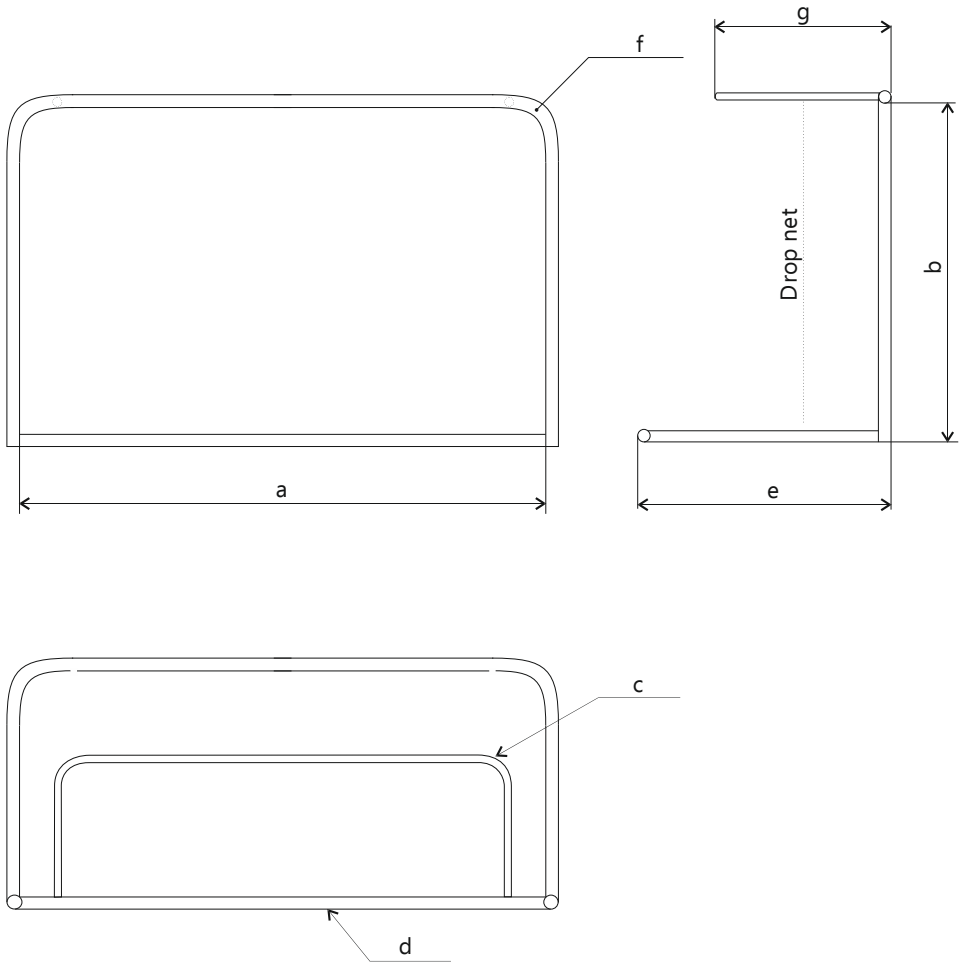

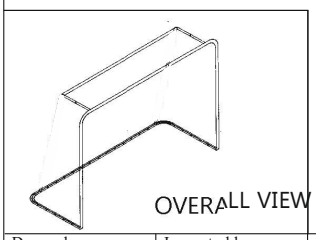

Drawn by	Inspected by	Approved by	Remarks	Replaces	Version
L-Å H				040623, ver 5	**6**

RISE Research Institute of Sweden Chemistry and Materials Technology Section for Polymer Technology Box 857 501 15 BORÅS, Sweden	Title **Floorball goal**	Drawn **060315**	
		Drawing no. **SPM 1506-C9e**	

Description	Appendix C10
Floorball rink dimensions	

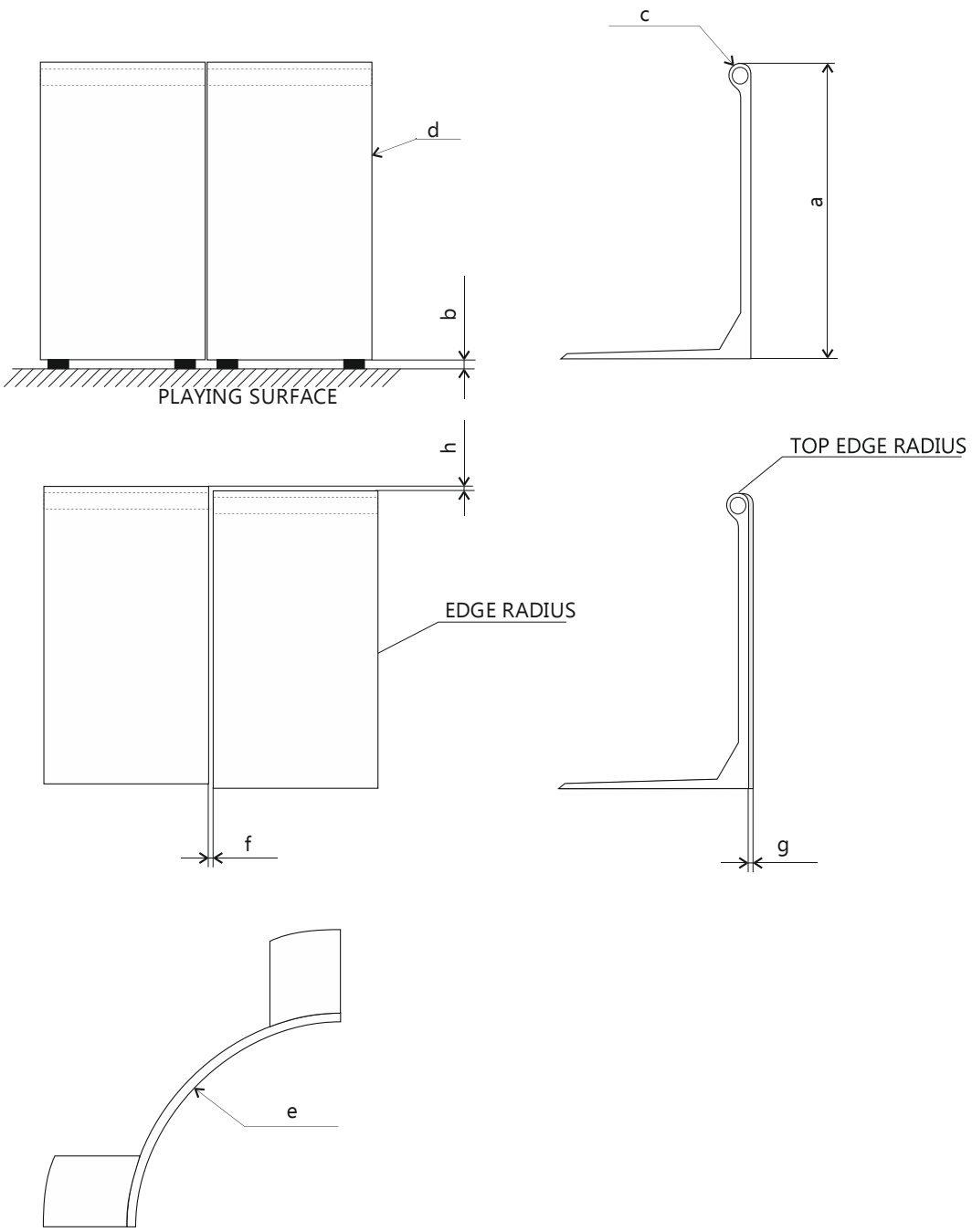

Drawn by	Inspected by	Approved by	Remarks	Replaces	Version
L-Å H				951115, ver 3	**4**

RISE Research Institute of Sweden Chemistry and Materials Technology Section for Polymer Technology Box 857 501 15 BORÅS, Sweden	Title **Floorball rink**	Drawn **040524**	
		Drawing no. **SPM 1506-C10e**	

Description	Equipment for net size test on face mask	Appendix C12

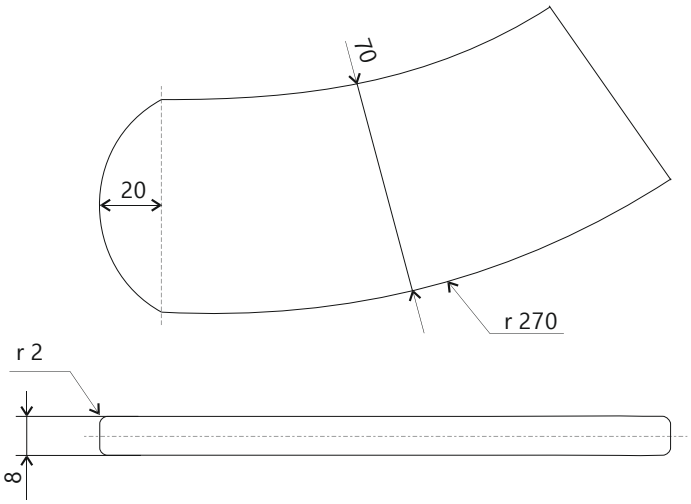

Drawn by	Inspected by	Approved by	Remarks	Replaces	Version
L-Å H				080512	4

RI. SE	**RISE Research Institute of Sweden** Chemistry and Materials Technology Section for Polymer Technology Box 857 501 15 BORÅS, Sweden	Title **Stick Blade Measuring Device**	Drawn **090702** Drawing no. **SPM 1506-C12e**